Serviceanleitung.

Service Manual. Manuel de Service. Manuale di Servizio.
Instrucciones de servicio. Service-instructies.

R 2550
RA 2550
230-90422.925

Articos 55 HD 63403
Articos 55 HD (US) 63404

Articos 55 HD
Art.-Nr. 63403

Articos 55 HD (US)
Art.-Nr. 63404

LOEWE.

Ⓓ

Inhaltsverzeichnis

Kapitel 1 Allgemeines

Sicherheitsvorkehrungen ..... 1 - 8
Technische Daten ..... 1 - 11
Technische Daten US ..... 1 - 17
Anschlussplan Loewe Concertos und Articos ..... 1 - 18
Anschlussplan Loewe Concertos und Articos US ..... 1 - 19
Anschlussplan Loewe Certos/Concertos und Articos ..... 1 - 20
Anschlussplan Loewe Certos/Concertos und Articos US ... 1 - 21
Verdrahtungsplan Articos ..... 1 - 22
Verdrahtungsplan Articos US ..... 1 - 23
Verdrahtungsplan DVB ..... 1 - 24
Service Menü ..... 1 - 25
Option Bytes Tabelle ..... 1 - 26

Kapitel 2 Schaltbilder und Leiterplatten

	Schaltbild,	Ltpl.
Fernbedienung RC2	2 - 1	2 - 2
Bedienteil	2 - 3	2 - 4
Bedienteil US	2 - 5	2 - 6
DIS Modul	2 - 7	2 - 8
S-Link-Erweiterung	2 - 9	2 - 10
HDR Netzteil	2 - 11	2 - 12
Audio Erweiterung	2 - 13	2 - 13
IR-Empfänger	2 - 14	2 - 14
Frequenzweiche	2 - 15	2 - 15
DVI-Erweiterung	3 - 38	2 - 16
Rear Board	3 - 38	2 - 18
Rear Board US	3 - 38	2 - 22
Scaler Board	3 - 38	2 - 26
Dolby Digital AC3 Modul	2 - 30	2 - 32
Hyperband-Tuner 87271.051	2 - 34	2 - 40
Hyperband-Tuner 87345.060	2 - 36	2 - 40
Hyperband-Tuner 87507.051	2 - 38	2 - 40
Hyperband-Tuner 87346.050	2 - 42	2 - 44
Bassverstärker	2 - 48	2 - 46

Kapitel 3 Ersatzteilelisten

Baugruppenübersicht ..... 3 - 1
Articos 55 HD ..... 3 - 2
Articos 55 HD US ..... 3 - 4
Basic Board ..... 3 - 6
Signal Board ..... 3 - 8
Signal Board US ..... 3 - 13
Optische Bildröhre ..... 3 - 17
Vorschaltgerät ..... 3 - 17
Frequenzweiche ..... 3 - 17
Rear Board ..... 3 - 18
Rear Board US ..... 3 - 19
Scaler Board ..... 3 - 21
Hyperband-Tuner 87271.051 ..... 3 - 23
Hyperband-Tuner 87345.060 ..... 3 - 24
Hyperband-Tuner 87507.051 ..... 3 - 25
Hyperband-Tuner 87346.050 ..... 3 - 26
DIS Modul ..... 3 - 27
Bassverstärker ..... 3 - 27
Bedienteil ..... 3 - 28
Bedienteil US ..... 3 - 29
DVI-Erweiterung ..... 3 - 30
ARS HDR ..... 3 - 31
HDR-Netzteil ..... 3 - 31
HDR-Interface ..... 3 - 32
Dolby Digital AC3 Modul / Audio Erweiterung ..... 3 - 33
Fernbedienung RC2 ..... 3 - 34
LOEWE-Niederlassungen ..... 3 - 36
Auslandsvertretungen ..... 3 - 37

Anhang

Basic Board (Schaltbild + Leiterpl.) ..... 3 - 38
Signal Board (Schaltbild + Leiterpl.) ..... 3 - 38
Scaler Board (Schaltbild) ..... 3 - 38
Rear Board (Schaltbild) ..... 3 - 38
DVI-Erweiterung (Schaltbild) ..... 3 - 38
HDR-Interface (Schaltbild + Leiterpl.) ..... 3 - 38

GB

Table of contents

Chapter 1 General

Safety precaution ..... 1 - 8
Technical specification ..... 1 - 12
Technical specification US ..... 1 - 17
Wiring diagram Loewe Concertos & Articos ..... 1 - 18
Wiring diagram Loewe Concertos & Articos US ..... 1 - 19
Wiring diagram Loewe Certos/Concertos & Articos ..... 1 - 20
Wiring diagram Loewe Certos/Concertos & Articos US . 1 - 21
Wiring diagram Articos ..... 1 - 22
Wiring diagram Articos US ..... 1 - 23
Wiring diagram DVB ..... 1 - 24
Service menu ..... 1 - 25
Option Byte Table ..... 1 - 26

Chapter 2 Schematic diagrams and P.C.B. diagrams

	Schematic	P.C.B.
Remote control RC2	2 - 1	2 - 2
Control unit	2 - 3	2 - 4
Control unit US	2 - 5	2 - 6
DIS Module	2 - 7	2 - 8
S link expansion	2 - 9	2 - 10
HDR power supply	2 - 11	2 - 12
Audio expansion	2 - 13	2 - 13
IR Receiver	2 - 14	2 - 14
Cross-over network	2 - 15	2 - 15
DVI extension	3 - 38	2 - 16
Rear Board	3 - 38	2 - 18
Rear Board US	3 - 38	2 - 22
Scaler Board	3 - 38	2 - 26
Dolby Digital AC3 Module	2 - 30	2 - 32
Hyperband tuner 87271.051	2 - 21	2 - 27
Hyperband tuner 87345.060	2 - 23	2 - 27
Hyperband tuner 87507.051	2 - 25	2 - 27
Hyperband tuner 87346.050	2 - 29	2 - 31
Subwoofer Amplifier	2 - 23	2 - 25

Chapter 3 Spare parts list

Components chart ..... 3 - 1
Articos 55 HD ..... 3 - 2
Articos 55 HD US ..... 3 - 4
Basic Board ..... 3 - 6
Signal Board ..... 3 - 8
Signal Board US ..... 3 - 13
Optical tube ..... 3 - 17
Fluorescent lamp ballast ..... 3 - 17
Cross-over network ..... 3 - 17
Rear Board ..... 3 - 18
Rear Board US ..... 3 - 19
Scaler Board ..... 3 - 21
Hyperband tuner 87271.051 ..... 3 - 23
Hyperband tuner 87345.060 ..... 3 - 24
Hyperband tuner 87507.051 ..... 3 - 25
Hyperband tuner 87346.050 ..... 3 - 26
DIS Module ..... 3 - 27
Subwoofer Amplifier ..... 3 - 27
Control unit ..... 3 - 28
Control unit US ..... 3 - 29
DVI expansion ..... 3 - 30
ASR HDR ..... 3 - 31
HDR Power supply ..... 3 - 31
HDR Interface ..... 3 - 32
Dolby Digital AC3 Module / Audio expansion ..... 3 - 33
Remote control RC2 ..... 3 - 34
LOEWE establishments ..... 3 - 36
Foreign representation ..... 3 - 37

Appendix

Basic Board (Schematic & P.C.B) ..... 3 - 38
Signal Board (Schematic & P.C.B) ..... 3 - 38
Scaler Board (Schematic) ..... 3 - 38
Rear Board (Schematic) ..... 3 - 38
DVI expansion (Schematic) ..... 3 - 38
TVO 3 Module (Schematic & P.C.B) ..... 3 - 38
HDR Interface (Schematic & P.C.B) ..... 3 - 38

Ⓕ

Table des matières

Chapitre 1 Général

Consignes de sécurité ..... 1 - 9
Caractéristiques techniques ..... 1 - 13
Caractéristiques techniques US ..... 1 - 17
Plan de câblage Loewe Concertos et Articos ..... 1 - 18
Plan de câblage Loewe Concertos et Articos US ..... 1 - 19
Plan de câblage Loewe Certos/Concertos et Articos .... 1 - 20
Plan de câblage Loewe Certos/Concertos et Articos US .. 1 - 21
Plan de câblage Articos ..... 1 - 22
Plan de câblage Articos US ..... 1 - 23
Plan de câblage DVB ..... 1 - 24
Menu de service ..... 1 - 25
Tableau Option Byte ..... 1 - 26

Chapitre 2 Schematic diagrams and P.C.B. diagrams

	Schematic,	P.C.B.
Télécommando RC2	2 - 1	2 - 2
Bloc de commande	2 - 3	2 - 4
Bloc de commande US	2 - 5	2 - 6
Module DIS	2 - 7	2 - 8
Expansion S Link	2 - 9	2 - 10
Bloc d'alimentation HDR	2 - 11	2 - 12
Expansion audio	2 - 13	2 - 13
Récepteur IR	3 - 14	2 - 14
Aiguille de frequence	2 - 15	2 - 15
Expansion DVI	3 - 38	2 - 16
Rear Board	3 - 38	2 - 18
Rear Board US	3 - 38	2 - 22
Scaler Board	3 - 38	2 - 32
Module Dolby Digital AC3	2 - 30	2 - 40
Tuner de hyperbande 87271.051	2 - 34	2 - 40
Tuner de hyperbande 87345.060	2 - 36	2 - 40
Tuner de hyperbande 87507.051	2 - 38	2 - 40
Tuner de hyperbande 87346.050	2 - 42	2 - 44
Amplificateur bassa	2 - 48	2 - 46

Chapitre 3 Liste des piéces de rechange

Correspondances des modules ..... 3 - 1
Articos 55 HD ..... 3 - 2
Articos 55 HD US ..... 3 - 4
Platine de fondation ..... 3 - 6
Platine signal ..... 3 - 8
Platine signal US ..... 3 - 13
Optique tube ..... 3 - 17
Ballast fluorescente de lampe ..... 3 - 17
Aiguille de frequence ..... 3 - 17
Rear Board ..... 3 - 18
Rear Board US ..... 3 - 19
Platine scaler ..... 3 - 21
Tuner de hyperbande 87271.051 ..... 3 - 23
Tuner de hyperbande 87345.060 ..... 3 - 24
Tuner de hyperbande 87507.051 ..... 3 - 25
Tuner de hyperbande 87346.050 ..... 3 - 26
Module DIS ..... 3 - 27
Amplificateur bassa ..... 3 - 27
Bloc de commande ..... 3 - 28
Bloc de commande US ..... 3 - 29
Expansion DVI ..... 3 - 30
ARS HDR ..... 3 - 31
Bloc d'alimentation HDR ..... 3 - 31
Interface HDR ..... 3 - 32
Module Dolby Digital AC3 / Expansion audio ..... 3 - 33
Télécommando RC2 ..... 3 - 34
Succursale LOEWE ..... 3 - 36
Représentation à l'étranger ..... 3 - 37

Appendice

Platinede de fondation (Schéma et Platine) ..... 3 - 38
Platine signal (Schéma et Platine) ..... 3 - 38
Platine scaler (Schéma et Platine) ..... 3 - 38
Rear Board (Schéma) ..... 3 - 38
Expansion DVI (Schéma) ..... 3 - 38
Interface HDR (Schéma et Platine) ..... 3 - 38

(I)

Indice

Capitolo 1 Generale

Norme di sicurezza ..... 1 - 9
Data tecnici ..... 1 - 14
Data tecnici US ..... 1 - 17
Schema Loewe Concertos e Articos ..... 1 - 18
Schema Loewe Concertos e Articos US ..... 1 - 19
Schema Loewe Certos/Concertos e Articos ..... 1 - 20
Schema Loewe Certos/Concertos e Articos US ..... 1 - 21
Schema connessioni Articos ..... 1 - 22
Schema connessioni Articos US ..... 1 - 23
Schema connessioni DVB ..... 1 - 24
Menu di servizio ..... 1 - 25
Tabella byte delle opzioni ..... 1 - 26

Capitolo 2 Schéma d' électrique et plan de comp.

	Schéma,	Platine
Telecomando RC2	2 - 1	2 - 2
Unitá di comando	2 - 3	2 - 4
Unitá di comando US	2 - 3	2 - 4
Modulo DIS	2 - 7	2 - 8
Espansione S Link	2 - 9	2 - 10
Sezione rete HDR	2 - 11	2 - 12
Espansione audio	2 - 13	2 - 13
Ricevitore IR	2 - 14	2 - 14
Deviatore di frequenze	2 - 15	2 - 15
Espansione DVI	3 - 38	2 - 16
Rear Board	3 - 38	2 - 18
Rear Board US	3 - 38	2 - 18
Piastra scaler	3 - 38	2 - 26
Modulo Dolby Digital AC3	2 - 30	2 - 32
Tuner di iperbanda 87271.051	2 - 34	2 - 40
Tuner di iperbanda 87345.060	2 - 36	2 - 40
Tuner di iperbanda 87507.051	2 - 38	2 - 40
Tuner di iperbanda 87346.050	2 - 42	2 - 44
Amplificatore dei bassi	2 - 48	2 - 46

Capitolo 3 Lista ricambi

Ordinamento dei gruppi ..... 3 - 1
Articos 55 HD ..... 3 - 2
Articos 55 HD US ..... 3 - 4
Piastra di base ..... 3 - 6
Piastra segnale ..... 3 - 8
Piastra segnale US ..... 3 - 13
Ottico cinescopio ..... 3 - 17
Reattanza fluorescente della lamp lampada ..... 3 - 17
Deviatore di frequenze ..... 3 - 17
Rear Board ..... 3 - 18
Rear Board US ..... 3 - 19
Piastra scaler ..... 3 - 12
Tuner di iperbanda 87271.051 ..... 3 - 23
Tuner di iperbanda 87345.060 ..... 3 - 24
Tuner di iperbanda 87507.051 ..... 3 - 25
Tuner di iperbanda 87346.050 ..... 3 - 26
Modulo DIS ..... 3 - 27
Amplificatore dei bassi ..... 3 - 27
Unitá di comando ..... 3 - 28
Unitá di comando US ..... 3 - 29
Espansione DVI ..... 3 - 30
ARS HDR ..... 3 - 31
Sezione rete HDR ..... 3 - 31
Interface HDR ..... 3 - 32
Modulo Dolby Digital AC3 / Espansione audio ..... 3 - 33
Telecomando RC2 ..... 3 - 34
Succursale LOEWE ..... 3 - 36
Rappresentanza all'estero ..... 3 - 37

Appendice

Piastra di base (Schema e Piastra) ..... 3 - 38
Piastra segnale (Schema e Piastra) ..... 3 - 38
Piastra scaler (Schema) ..... 3 - 38
Rear Board (Schema) ..... 3 - 38
Espansione DVI (Schema) ..... 3 - 38
Interface HDR (Schema e Piastra) ..... 3 - 38

Ⓔ

Tabla de contenido

Capítulo 1 Generalidades

Normas de seguridad ..... 1 - 10
Datos técnicos ..... 1 - 15
Datos técnicos ..... 1 - 17
Diagrama Loewe Concertos e Spheros ..... 1 - 18
Diagrama Loewe Concertos e Spheros US ..... 1 - 19
Diagrama Loewe Certos/Concertos e Artikos ..... 1 - 20
Diagrama Loewe Certos/Concertos e Artikos US ..... 1 - 21
Diagrama de conexiones Artikos ..... 1 - 21
Diagrama de conexiones Artikos US ..... 1 - 22
Diagrama de conexiones DVB ..... 1 - 22
Menú Service ..... 1 - 25
Tabla de bytes de opciones ..... 1 - 27

Capítulo 2 Esquema de conexiones y placas de circuito impreso

	Esquema	Placa
Mando a distancia RC2	2 - 1	2 - 2
Placa del tubo de imagen	2 - 3	2 - 4
Placa del tubo de imagen US	2 - 5	2 - 6
Módulo DIS	2 - 7	2 - 8
Expansión S Link	2 - 9	2 - 10
Equipo de alimentación HDR	2 - 11	2 - 12
Expansión audio	2 - 13	2 - 13
Receptor IR	2 - 14	2 - 14
Diplexor	2 - 15	2 - 15
Expansión DVI	3 - 38	2 - 16
Rear Board	3 - 38	2 - 18
Rear Board US	3 - 38	2 - 22
Tarjeta de scaler	3 - 38	2 - 26
Módulo Dolby Digital AC3	2 - 30	2 - 32
Sintonizador para hiperbanda 87271.051	2 - 34	2 - 40
Sintonizador para hiperbanda 87345.060	2 - 34	2 - 40
Sintonizador para hiperbanda 87507.051	2 - 34	2 - 40
Sintonizador para hiperbanda 87346.050	2 - 42	2 - 44
Amplificador de graves	2 - 48	2 - 46

Capítulo 3 Lista de piezas de recambio

Vista general de módulos ..... 3 - 1
Articos 55 HD ..... 3 - 2
Articos 55 HD US ..... 3 - 4
Tarjeta básica ..... 3 - 6
Tarjeta de señales ..... 3 - 8
Tarjeta de señales US ..... 3 - 13
Óptico tube de imagen ..... 3 - 17
Lastre fluorescente de la lámpara ..... 3 - 17
Diplexor ..... 3 - 17
Rear Board ..... 3 - 18
Rear Board US ..... 3 - 19
Tarjeta scaler ..... 3 - 21
Sintonizador para hiperbanda 87271.051 ..... 2 - 23
Sintonizador para hiperbanda 87345.060 ..... 2 - 24
Sintonizador para hiperbanda 87507.051 ..... 2 - 25
Sintonizador para hiperbanda 87346.050 ..... 2 - 26
Módulo DIS ..... 3 - 27
Amplificatore dei bassi ..... 3 - 27
Panel de mando ..... 3 - 28
Panel de mando US ..... 3 - 29
Expansión DVI ..... 3 - 30
ARS HDR ..... 3 - 31
Equipo de alimentación HDR ..... 3 - 31
Interface HDR ..... 3 - 32
Módulo Dolby Digital AC3 / Expansión audio ..... 3 - 33
Mando a distancia RC2 ..... 3 - 34
Delegaciones LOEWE ..... 3 - 36
Delegaciones en el extranjero ..... 3 - 37

Anexo

Tarjeta básica (Esquema de conexiones y placas de circuito impreso) ..... 3 - 38
Tarjeta de señales (Esquema de conexiones) ..... 3 - 38
Tarjeta de scaler (Esquema de conexiones y placas de circuito impreso) ..... 3 - 38
Rear Board (Esquema de conexiones) ..... 3 - 38
Expansión DVI (Esquema de conexiones) ..... 3 - 38
Interface HDR (Esquema de conexiones y placas de circuito impreso) ..... 3 - 38

NL

Inhoudsopgave

Hoofdstuk 1 Algemeen

Veiligheidsmaatregelen ..... 1 - 10
Technische gegevens ..... 1 - 16
Technische gegevens US ..... 1 - 17
Bedradingsschema Loewe Concertos e Artikos ..... 1 - 18
Bedradingsschema Loewe Concertos e Artikos US ..... 1 - 19
Bedradingsschema Loewe Certos/Concertos e Artikos .... 1 - 20
Bedradingsschema Loewe Certos/Concertos e Artikos US ... 1 - 21
Bedradingsschema Artikos ..... 1 - 22
Bedradingsschema Artikos US ..... 1 - 23
Bedradingsschema DVB ..... 1 - 24
Menu Service ..... 1 - 25
Option Bytes-tabel ..... 1 - 26

Hoofdstuk 2 Schakelschema's en printplaten

	Schema's	platen
Afstandsbediening RC2	2 - 1	2 - 2
Bedieningsgedeelte	2 - 3	2 - 4
Bedieningsgedeelte US	2 - 5	2 - 6
DIS moduul	2 - 7	2 - 8
HDR expansie	2 - 9	2 - 10
HDR Voedingseenheid	2 - 11	2 - 12
Audio expansie	2 - 13	2 - 13
IR Ontvanger	2 - 14	2 - 15
Frequentie flank	2 - 15	2 - 15
DVI expansie	3 - 38	2 - 16
Rear Board	3 - 38	2 - 18
Rear Board US	3 - 38	2 - 22
Scaler Board	3 - 38	2 - 26
Dolby Digital AC3 moduul	2 - 30	2 - 32
Hyperband-tuner 87271.051	2 - 34	2 - 40
Hyperband-tuner 87345.060	2 - 36	2 - 40
Hyperband-tuner 87507.051	2 - 38	2 - 40
Hyperband-tuner 87346.050	2 - 42	2 - 44
Basversterker	2 - 48	2 - 46

Hoofdstuk 3 Onderdelenlijsten

Overzicht van de modules ..... 3 - 1
Articos 55 HD ..... 3 - 2
Articos 55 HD US ..... 3 - 4
Basic Board ..... 3 - 6
Signal Board ..... 3 - 8
Signal Board US ..... 3 - 13
Optische Bildröhre ..... 3 - 17
Fluorescent lamp ballast ..... 3 - 17
Frequentie flank ..... 2 - 17
Rear Board ..... 3 - 18
Rear Board US ..... 3 - 19
Scaler Board ..... 3 - 21
Hyperband-tuner 87271.051 ..... 2 - 23
Hyperband-tuner 87345.060 ..... 2 - 24
Hyperband-tuner 87507.051 ..... 2 - 25
Hyperband-tuner 87346.050 ..... 2 - 26
DIS moduul ..... 3 - 27
Basversterker ..... 3 - 27
Bedieningsgedeelte ..... 3 - 28
Bedieningsgedeelte US ..... 3 - 29
DVI expansie ..... 3 - 30
ARS HDR ..... 3 - 31
HDR Voedingseenheid ..... 3 - 31
HDR Interface ..... 3 - 32
Dolby Digital AC3 moduul / Audio expansie ..... 3 - 33
Afstandsbediening RC2 ..... 3 - 34
LOEWE-vestigingen ..... 3 - 36
Vertegenwoordigingen in het buitenland ..... 3 - 38

Appendix

Basic Board (schakelschema + printplaat) ..... 3 - 38
Signal Board (schakelschema + printplaat) ..... 3 - 38
Scaler Board (schakelschema) ..... 3 - 38
Rear Board(schakelschema) ..... 3 - 38
DVI expansie (schakelschema + printplaat) ..... 3 - 38
HDR Interface (schakelschema + printplaat) ..... 3 - 34

(D)

Hinweis zum Schutz gegen Elektrostatik

1. Elektrostatisch gesicherte MOS-Arbeitsplätze.

Der Umgang mit gegen Elektrostatik empfindlichen Bauteilen muß an einem elektrostatisch gesicherten MOS-Arbeitsplatz erfolgen.
Ein elektrostatisch gesicherter MOS-Arbeitsplatz erdet über Entladungswiderstände sämtliche leitende Materialien einschließlich der Person. Nichtleiter werden durch Luftionisation entladen. Die Integration von Lötkolben und Meßgeräten in den gesicherten MOS-Arbeitsplatz ist nur mit Trenntrafo in jedem der verwendeten Geräte möglich. Die Meßgeräte-Massen werden ebenfalls mit Entladungs-widerständen geerdet.

2. Gesicherte Verpackung durch leitfähige Materialien.

Zum Schutz gegen Elektrostatik werden elektrisch leitende Kunststoffe für Verpackung und Transportmittel verwendet. Leitende Kunststoffe gibt es als schwarze oder transparente Schutzbeutel, Schaumstoff, Folien und als Behälter.
Empfindliche Bauteile dürfen nur am gesicherten MOS-Arbeits-platz aus der Verpackung entfernt bzw. verpackt werden.

Sicherheitshinweise/Vorschriften

1. Instandsetzungen, Änderungen und Prüfung netzbetriebener elektronischer Geräte und deren Zubehör dürfen nur von fachkundigen Personen ausgeführt werden.
2. Es gelten die Vorschriften und Sicherheitshinweise nach VDE 0701, Teil 200, und die Vorschriften und Sicherheitshinweise des jeweiligen Landes!
3. VDE 0701, Teil 200, beinhaltet Vorschriften zur Instandsetzung, Änderung und Prüfung netzbetriebener elektronischer Geräte und deren Zubehör.
4. Vor der Auslieferung des Geräts muß eine Sichtprüfung des Geräts und der Anschlußleitungen (und soweit vorhanden, des Schutzleiters), und die Messung des Isolationswiderstandes und des Ersatz-Ableitstromes nach VDE 0701, Teil 200, durchgeführt werden. Der niederohmige Durchgang des Schutzleiters ist durch Messung laut Vorschrift VDE 0701, Teil 1, nachzuweisen.
5. Die Vorschriften des jeweiligen Landes sind zusätzlich zu beachten.
6. Bauteile mit dem Symbol ⚠ gekennzeichnet, dürfen nur durch Originalteile ersetzt werden.

Hinweis:

Serviceunterstützung, siehe Servicekoffer 90417.922

(GB)

CAUTION:

These servicing instructions are for use by qualified service personal only. To reduce the risk of electric shock do not perform any servicing other then that contained in the operating instructions unless you are qualified to do so:

Note on electrostatic shielding

1. Electrostatically shielded MOS workstations

Components sensitive to electrostatic discharge must be handled at workstation with electrostatic shielding. An electrostatically shielded MOS workstation is fitted with discharge resistor which earth all conductive materials, including the technician working there. Dielectrics are discharged by air ionisation. The use of soldering irons and measuring equipment at shielded workstation is only possible in conjunction with isolating transformer in each of the devices used. Measuring equipment chassis are also earthed with discharge resistors.

2. Shielded packaging using conductive materials

To protect against electrostatic charges, electrically conductive plastics are used for packaging and transport purposes. Conductive plastics are available in the form of transparent protective bags, foam plastic, film sheeting or containers. Sensitive components requiring the use of protective packaging must only be packed and unpacked at shielded workstations

Safety warnings/regulations

1. The repair, modification and testing of mains-operated electronic devices and their accessories must only be performed by qualified persons.
2. It is necessary to follow the regulations and safety warnings to VDE 0701, part 200, as well as the regulations and safety warnings applicable in the country concerned.
3. VDE 0701, Part 2, contains regulations on the repair, modification and testing of mains-operated electronic devices and their accessories.
4. Before delivery, the device and the connecting leads (including any protective earth conductor fitted) must undergo visual inspection, and the insulation resistance and the equivalent leakage current must be measured according to VDE 0701, part 200. The low-resistance continuity of the protective earth conductor must be verified by measurement to VDE regulation 0701, part 1.
5. The regulations of the country concerned must also be observed.
6. Only genuine parts must be used for replacing components marked with the symbol ⚠

Note:

Service support, see service suitcase 90417.922

(F)

Recommandations pour la protection contre les charges électrostatiques

1. Postes de travail MOS protégés électrostatiquement

La manipulation de composants sensibles aux charges électrostatiques doit impérativement se faire a un poste de travail MOS protégé électrostatiquement. Un tel poste de travail MOS protégé électrostatiquement met tous les matéraux conducteurs à la masse par l'intermédiaire de résistances de décharge, y compris la personne qui y travaille. Les nonconducteurs sont déchargés par ionisation de l'air. L'intégration de fers 3 souder et d'appareils de mesure dans le poste de travail MOS protégé électrostatiquement n'est admissible que par l'intermédiaire de transformateurs de séparation intégrés à chacun des appareils. Les terres des appareils de mesure sont également mises 3 la masse par l'intermédiaire de résistance de décharge.

2. Emballages de sécurité faits de matériaux conducteurs

Pou les protéger contre les charges électrostatiques, les com-posants sensibles sont emballes et transportes dans des matières plastiques conductrices d'électricité. Les matières plastiques conductrises existent en tant que sachets de protection noirs ou transparents, mousses, feuilles et aussi en tant que conteneurs. Les composants sensibles ne doivent être sortis de leu emballage conducteur ou y être emballes qu'au poste de travail MOS électrostatiquement protégé.

Consignes et prescriptions de sécurité

1. Les remises en état, modifications et examen d'appareils électroniques exploités sur réseau, et leurs accessoires, ne doivent être exécutés que par des professionnels.
2. On appliquera les prescriptions et consignes de sécurité selon VDE 0701, partie 200, et les prescriptions et consignes de sécurité du pays respectif!
3. VDE 0701, partie 200, comporte des prescriptions sur la remise en état, modification et examen d'appareils électroniques exploités sur réseau, et leurs accessoires.
4. Avant la livraison de l'appareil, il faut effectuer un examen visuel de l'appareil et câbles de branchement (et si existant de la terre), et la mesure de la résistance d'isolation et du courant de fuite de remplacement selon VDE 0701, partie 200. Le passage de basse impédance de la terre doit être démontré par une mesure conformément à la prescription VDE 0701, partie 1.
5. Les prescriptions du pays respectif doivent être également observées.
6. Les éléments caractérisés avec le symbole ⚠ ne doivent être remplacés que par des pièces originales.

Consigne:

Aide service, voir valise service 90417.922

(I)

Nota per la protezione da scariche elettrostatiche

1. Posti di lavoro MOS protetti elettrostaticamente

La manipolazione di componenti sensibili alle scariche elettrostatiche deve essere eseguita a posti di lavoro MOS protetti da queste scariche. Un posto di lavoro MOS protetto dalle scariche elettrostatiche convoglia a terra tutti i materiali conduttori compresa la persona mediante resistenze di scarica. Gli isolatori vengono scaricati mediante ionizzazione dell'aria. L'integrazione di saldatoi e apparecchi di misura nel posto di lavoro MOS protetto é possibile solo attraverso trasformatori di separazione in ogni apparecchio usato. Anche le massa degli apparecchi di misura vengono scaricate a terra mediante resistente di scarica.

2. Imballaggio protetto mediante materiali conduttori

Per proteggere le componenti dalle scariche elettrostatiche vengono usati degli imballaggi e dei mezzi di trasporto di materiale sintetico conduttore. Esistono imballaggi di materiale sintetico conduttore sottoforma di sacchetti di protezione trasparenti o neri, materiale schiumoso, fogli e contenitori.
Componenti sensibili devono essere tolti, risp. messi negli imballaggi di materiale conduttore solo in un posto di lavoro MOS protetto.

Note per la sicurezza/disposizioni

1. Riparazioni, modifiche e controlli su apparecchiature elettroniche ed accessori collegati alla rete elettrica devono essere eseguiti esclusivamente da personale esperto.
2. Si applicano le disposizioni e le note per la sicurezza della norma VDE 0701, parte 200, e quelle del Paese di installazione.
3. VDE 0701, parte 200, riporta le disposizioni per le riparazioni, modifiche e controlli su apparecchiature elettroniche ed accessori collegati alla rete elettrica.
4. Prima della consegna, si deve effettuare un controllo visivo dell'apparecchio e dei cavi di collegamento (anche del conduttore di protezione, se presente) nonchè la misurazione della resistenza di isolamento e della corrente deviata sostitutiva secondo la norma VDE 0701, parte 200. La continuità a basso valore ohmico del conduttore di protezione va dimostrata secondo la norma VDE 0701, parte 1.
5. Si devono rispettare anche le disposizioni relative in vigore nel Paese di installazione.
6. Componenti contrassegnati con il simbolo ⚠ devono essere sostituiti solo con ricambi originali.

Nota:

Appoggio servizio, vedere valigia servizio 90417.922

(E)

Advertencia para la protección contra cargas electrostáticas

1. Protección contra cargas electrostáticas en puestos de manipulación de módulos MOS

La manipulación de piezas sensibles contra cargas electrostáticas debe realizarse en puestos de manipulación de módulos MOS protegidos contra dichas cargas.
Para que un puesto de manipulación de módulos MOS esté protegido contra descargas electrostáticas, todos los materiales conductores, incluído el operario, deben conectarse a tierra mediante resistencias de descarga. Los elementos no conductores deben descargarse mediante un ionizador de aire. La integración de soldadores y aparatos de medición en los puestos de manipulación de módulos MOS sólo se puede realizar con transformadores separadores en cada aparato utilizado. También deben conectarse a tierra las masas de los aparatos de medición utilizando resistencias de descarga.

2. Embalaje protegido con materiales conductores

Para la protección contra las cargas electrostáticas se utilizan materiales sintéticos conductores para el embalaje y el transporte. Los materiales sintéticos conductores están disponibles en forma de bolsas protectoras negras o transparentes, gomaespuma, películas y envases.
Las piezas electrostáticamente sensibles deben embalarse y/o desembalarse solamente en puestos de manipulación de módulos MOS.

Advertencias y normas de seguridad

1. Las puestas a punto, cambios y revisiones de aparatos electrónicos alimentados por la red y sus accesorios, sólo deben realizarse por personas especializadas.

2. Son aplicables las advertencias y normas de seguridad detalladas en la norma VDE 0701, apartado 200 y las correspondientes de cada país.

3. El apartado 200 de la norma VDE 0701 describe las puestas a punto, cambios y revisiones de aparatos electrónicos alimentados por la red y sus accesorios.

4. Antes de efectuar el suministro del aparato debe realizarse una comprobación visual del mismo y de las líneas de conexión (y, en su caso, de la línea protectora), así como una medición de la resistencia de aislamiento y de la corriente sustitutiva de escape según VDE 0701, apartado 200. Debe verificarse la baja resistencia de la línea protectora recogida en la norma VDE 0701, apartado 1.

5. Se han de tener en cuenta además las normas de los países correspondientes.

6. Las piezas marcadas con el símbolo ⚠ sólo podrán reemplazarse por piezas originales.

Nota:

Apoyo servicio, ver maleta servicio 90417.922

(NL)

Aanwijzing ter bescherming tegen elektrostatica

1. Elektrostatisch beveiligde MOS-werkplekken.

De omgang met voor elektrostatica gevoelige componenten moet op een elektrostatisch beveiligde MOS-werkplek plaatsvinden.
Bij een elektrostatisch beveiligde MOS-werkplek worden alle geleidende materialen en de persoon zelf via ontladingsweerstanden geaard. Niet-geleiders worden door luchtionisatie ontladen. De integratie van soldeerbouten en meetapparaten in de beveiligde MOS-werkplek is alleen met een scheidingstransformator in elk van de gebruikte apparaten mogelijk. De massa's van de meetapparaten worden eveneens met ontladingsweerstanden geaard.

2. Veilige verpakking door geleidende materialen.

Ter bescherming tegen elektrostatica worden elektrisch geleidende kunststoffen voor de verpakking en de transportmiddelen gebruikt. Geleidende kunststoffen zijn als zwarte of transparante beschermzakjes, schuimstof, folie en als container verkrijgbaar.
Gevoelige componenten mogen alleen op de beveiligde MOS-werkplek uit de verpakking worden gehaald resp.worden verpakt.

Veiligheidsinstructies/voorschriften

1. Elektronische apparaten met netvoeding en hun toebehoren mogen uitsluitend door vakkundige personen worden gerepareerd, gewijzigd en gecontroleerd.

2. De voorschriften en veiligheidsinstructies volgens VDE 0701, deel 200, en de voorschriften en veiligheidsinstructies van het desbetreffende land zijn van kracht!

3. VDE 0701, deel 200, bevat de voorschriften voor de reparatie, de wijziging en de controle van elektronische apparaten met netvoeding en hun toebehoren.

4. Voordat het toestel wordt afgeleverd, moeten het toestel en de aansluitleidingen (en voor zover aanwezig, de aarddraad) aan een visuele controle worden onderworpen en de isolatieweerstand en de reserve-lekstroom conform VDE 0701, deel 200, worden gemeten. De laagohmige doorgang van de aarddraad moet door meting volgens voorschrift VDE 0701, deel 1, worden aangetoond.

5. Tevens dienen de voorschriften van het desbetreffende land in acht te worden genomen.

6. Componenten die gekenmerkt zijn met het symbool ⚠ , mogen uitsluitend door originele reserveonderdelen worden vervangen.

Aanwijzing:

Service ondersteuning, zien service koffer 90417.922

Ⓓ Technische Daten

Mechanische Daten

Articos 55 HD	**Artikelnummer 63403**
Abmessungen (cm)	136,9 x 103,5 x 52 (B x H x T)
Masse (kg)	76,5
Technologie	1-Panel DLP Optical System made by Carl Zeiss
Bild-Format	16 : 9
Bilddiagonale	sichtbar 140 cm
Pixel-Format	1280 x 720 progressiv
Relative Luftfeuchte	20 ... 80% keine Kondensation
Luftdruck 800 ... 1114 HPa	(0 ... 3000 m NN)

Elektrische Daten

Chassisbezeichnung	R 2550
Digital Light Processing™ Technology	
Projektionslampe	120 Watt long life
Stromversorgung	120 V bis 240 V / 50-60Hz
Leistungsaufnahme	190 Watt Standby < 3 Watt
Umgebungstemperatur	0º – 40º Celsius
Full Digital	AMD / DNC einstellbar
Tuner VHF/UHF/ Kabel (Hyperband 8 MHz)	42 MHz bis 860 MHz
Programmplatzspeicher	220
mit DVB-Decoder	1470
TV-Normen	PAL-B/G, PAL-D/K, PAL-I, PAL-L PAL M/N, PAL 60 Secam B/G, D/K, L NTSC / NTSCV
Teletext	Hi-Text (Level 2.5)
Ton-Normen	Mono/Stereo/2-Ton Nicam B/G, L, I
Audio-Nennleistung	2 x 20 Watt / 4 Ohm
Audio-Musikleistung	2 x 40 Watt / 4 Ohm
Lautsprecher	2 geschlossene Boxen
Hochtöner	Ø 50 mm Kalotte
Tieftöner	Ø 104 mm

Anschlüsse (linke Gehäuseseite)

Mini-DIN S-Video-Eingang (AVS)		SVHS / Hi 8 / VHS / 8 mm
Cinch Video-Eingang (AVS)		VHS / 8 mm
Cinch Toneingänge		L + R
Kopfhöreranschluss	Klinke 6,3mm	32 – 200 Ohm

Anschlüsse (Rückseite)

IEC-Buchse 75 Ohm		Antenne / Kabel/PIP
EURO-AV 1:	Video IN	SVHS / Hi 8 / VHS / 8 mm
	Video OUT	SVHS / Hi 8 / VHS / 8 mm
	Audio IN/OUT	L + R
EURO-AV 2:	Video IN	SVHS / Hi 8 / RGB / VHS / 8 mm
	Video OUT	(SVHS / Hi 8 nur bei SVHS Link Plus) VHS / 8 mm
	Audio IN/OUT	L + R
EURO-AV 3:	Video IN/OUT	SVHS / Hi 8 / RGB / YUV / VHS / 8 mm
	Audio IN	L + R

Component IN:	
Cinch	Y-Signal
Cinch	Cr/Pr-Signal
Cinch	Cb/Pb-Signal
2xCinch L+R	AUDIO OUT
2xCinch L+R	AUDIO IN 1
Klinkenbuchse 3,5mm	AUDIO IN 2
2xCinch L+R	AUDIO IN 3
Cinch-Eingangsbuchse IN 1	Digital-Ton
Cinch-Eingangsbuchse IN 2	Digital-Ton
Cinch-Ausgangsbuchse OUT	Digital-Ton
SYSTEM-Buchse, 9-polig	AUDIO
Infrarot-Link	Klinkenbuchse 3,5 mm
RC5/RC6	Klinkenbuchse 2,5 mm
Service-Buchse	8-polig
Anschluss DVI	Digital-Eingang
Eingang-VGA	über DVI-Buchse mit optionalem Adapter
Buchse CTRL	für Drehfuß-Steuerung

GB Technical data

Mechanical data

Articos 55 HD	**article number 63403**
Dimensions (cm)	136.9 x 103.5 x 52 (W x H x D)
Weight (kg)	76.5
Technology	1-Panel DLP Optical System made by Carl Zeiss
Picture format	16 : 9
Visible screen diagonal	140 cm
Pixel format	1280 x 720 progressive
Relative humidity	20 ... 80% No condensation
Air pressure 800 ... 1114 HPa	(0 ... 3000 m above sea level)

Electrical data

Chassis designation	R 2550
Digital Light Processing™ Technology	
Projection lamp	120 Watt long life
Power supply	120 V to 240 V / 50-60Hz
Power consumption	190 Watt Standby < 3 Watt
Ambient temperature	0º - 40º Celsius
Full Digital AMD / DNC adjustable	
Tuner VHF/UHF/ cable (Hyperband 8 MHz)	42 MHz to 860 MHz
Station memory	220
with DVB decoder	1470
TV standards	PAL-B/G, PAL-D/K, PAL-I, PAL-L PAL M/N, PAL 60 Secam B/G, D/K, L NTSC / NTSCV
Teletext	Hi-Text (Level 2.5)
Audio standards	mono/stereo/2-sound Nicam B/G, L, I
Audio rated output	2 x 20 Watt / 4 Ohm
Audio music output	2 x 40 Watt / 4 Ohm
2 enclosed speakers	
Treble	Ø 50 mm cone
Bass	Ø 104 mm

Terminals (left side of housing)

Mini-DIN S-Video-In (AVS)	SVHS / Hi 8 / VHS / 8 mm
Cinch Video-In	(AVS) VHS / 8 mm
Cinch Audio In	L + R
Headphones	jack 6.3mm 32 - 200 Ohm

Terminals (rear)

IEC socket 75 Ohm		antenna / cable/PIP
EURO-AV 1:	Video IN	SVHS / Hi 8 / VHS / 8 mm
	Video OUT	SVHS / Hi 8 / VHS / 8 mm
	Audio IN/OUT	L + R
EURO-AV 2:	Video IN	SVHS / Hi 8 / RGB / VHS / 8 mm
	Video OUT	(SVHS / Hi 8 only on SVHS Link Plus) VHS / 8 mm
	Audio IN/OUT	L + R
EURO-AV 3:	Video IN/OUT	SVHS / Hi 8 / RGB/ YUV / VHS / 8 mm
	Audio IN	L + R

Component IN:	
Cinch	Y-signal
Cinch	Cr/Pr-signal
Cinch	Cb/Pb-signal
2xCinch L+R	AUDIO OUT
2xCinch L+R	AUDIO IN 1
Jack 3.5mm	AUDIO IN 2
2xCinch L+R	AUDIO IN 3
Cinch input socket IN 1	Digital-Audio
Cinch-input socket IN 2	Digital-Audio
Cinch-output socket OUT	Digital-Audio
SYSTEM socket, 9-pin	AUDIO
Infrared link	jack 3.5 mm
RC5/RC6	jack 2.5 mm
Service socket	8-pin
Connection DVI	Digital-Input
Input-VGA	via DVI-socket with Optional adapter
Socket CTRL	for rotary stand control

Ⓕ Caractéristiques techniques

Caractéristiques mécaniques

Articos 55 HD	**Numéro d'article 63403**
Dimensions (cm)	136,9 x 103,5 x 52 (L x H x P)
Poids (kg)	76,5
Technologie	1-Panel DLP Syst me optique made by Carl Zeiss
Format d'image	16:9
Diagonale d'image	visible 140 cm
Format pixel	1280 x 720 progressif
Humidit relative de l'air	20 ... 80% aucune condensation
Pression 800 ... 1114 HPa	(0 ... 3000 m NN)

Caractéristiques électriques

Désignation du châssis	R 2550
Digital Light Processing™ Technology	
Lampe de projection	120 Watt longue durée
Alimentation	120 V à 240 V / 50-60Hz
Puissance consomm e	190 Watt Veille < 3 Watt
Temp rature ambiante	0º - 40º Celsius
Full Digital	AMD / DNC réglable
Tuner VHF/UHF/ Câble (Hyperband 8 MHz)	42 MHz à 860 MHz
M moire de programmes	220
avec d codeur DVB	1470
Normes TV	PAL-B/G, PAL-D/K, PAL-I, PAL-L PAL M/N, PAL 60 Secam B/G, D/K, L NTSC / NTSCV
Télétexte	Hi-Text (niveau 2.5)
Normes son	mono/stéréo/dual Nicam B/G, L, I
Puissance nominale audio	2 x 20 Watt / 4 Ohm
Puissance musicale audio	2 x 40 Watt / 4 Ohm
Haut-parleurs	2 enceintes ferm es
Aiguës	Ø 50 mm calotte
Graves	Ø 104 mm

Connexions (côté gauche du coffret)

Entrée S-vidéo mini-DIN (AVS)	SVHS / Hi 8 / VHS / 8 mm
Cinch entr e vid o (AVS)	VHS / 8 mm
Cinch entrée son	L + R
Prise casque	Jack 6,3mm 32 - 200 Ohm

Connexions (dos du téléviseur)

Prise IEC 75 Ohm		Antenne /Câble/PIP
EURO-AV 1 :	Vidéo IN	SVHS / Hi 8 / VHS / 8 mm
	Vidéo OUT	SVHS / Hi 8 / VHS / 8 mm
	Audio IN/OUT	L + R
EURO-AV 2 :	Vidéo IN	SVHS / Hi 8 / RGB / VHS / 8 mm
	Vidéo OUT	(SVHS / Hi 8 uniquement pour SVHS Link Plus) VHS / 8 mm
	Audio IN/OUT	L + R
EURO-AV 3 :	Vidéo IN/OUT	SVHS / Hi 8 / RGB / YUV / VHS / 8 mm
	Audio IN	L + R

Component IN :	
Cinch	Signal Y
Cinch	Signal Cr/Pr
Cinch	Signal Cb/Pb
2xcinch L+R	AUDIO OUT
2xcinch L+R	AUDIO IN 1
Cinch 3,5mm	AUDIO IN 2
2xcinch L+R	IN 3
Cinch entr e IN 1	son num rique
Cinch entr e IN 2	son num rique
Cinch entr e OUT	son num rique
Prise SYSTÈME, 9 pôles	AUDIO
Douille de jack infrarouge	3,5 mm
Douille de jack RC5/RC6	2,5 mm
Prise Service	8 pôles
Prise DVI	entrée numérique
Entrée VGA	via prise DVI avec adaptateur optionnel
Prise CTRL	pour la commande du pied rotatif

Dati tecnici

Dati meccanici

Articos 55 HD	**codice articolo 63403**
Dimensioni (cm)	136,9 x 103,5 x 52 (largh. x alt. x prof.)
Massa (kg)	76,5
Tecnologia	1-Panel DLP Optical System made by Carl Zeiss
Formato immagine	16 : 9
Diagonale immagine	visibile 140 cm
Formato Pixel	1280 x 720 progressivo
Umiditˆ relativa dell'aria	20 ... 80%
No condensa	
Pressione dell'aria 800 ... 1114 HPa	(0 ... 3000 m NN)

Dati elettrici

Denominazione chassis	R 2550
Digital Light Processing™ Technology	
Lampada proiezione	120 Watt long life
Alimentazione elettrica	120 V - 240 V / 50-60Hz
Potenza assorbita	190 Watt Standby < 3 Watt
Temperatura ambiente	0º - 40º Celsius
Full Digital	AMD / DNC impostabile
Sintonizzatore VHF/UHF/ cavo (iperbanda 8 MHz)	42 MHz - 860 MHz
Quantità programmi	220
con decodificatore DVB	1470
Norme TV	PAL-B/G, PAL-D/K, PAL-I, PAL-L PAL M/N, PAL 60 Secam B/G, D/K, L NTSC / NTSCV
Televideo	Hi-Text (livello 2.5)
Norme audio	Mono/Stereo/2 modalità audio Nicam B/G, L, I
Potenza nominale audio	2 x 20 Watt / 4 Ohm
Potenza musica audio	2 x 40 Watt / 4 Ohm
Altoparlanti	2 box chiusi
Alti	Ø 50 mm calotta
Bassi	Ø 104 mm

Collegamenti (parte sinistra della scatola)

Ingresso Mini-DIN S-Video (AVS)	SVHS / Hi 8 / VHS / 8 mm
Ingresso Cinch Video (AVS)	VHS / 8 mm
Ingressi Cinch audio	L + R
Collegamento cuffia	Jack 6,3mm 32 - 200 Ohm

Collegamenti (retro)

Presa IEC 75 Ohm		Antenna / cavo/PIP
EURO-AV 1:	Video IN	SVHS / Hi 8 / VHS / 8 mm
	Video OUT	SVHS / Hi 8 / VHS / 8 mm
	Audio IN/OUT	L + R
EURO-AV 2:	Video IN	SVHS / Hi 8 / RGB / VHS / 8 mm
	Video OUT	(SVHS / Hi 8 Solo per SVHS Link Plus) VHS / 8 mm
	Audio IN/OUT	L + R
EURO-AV 3:	Video IN/OUT	S-VHS / Hi 8 / RGB / YUV / VHS / 8 mm
	Audio IN	L + R

Component IN:	
Cinch	Y-Signal
Cinch	Cr/Pr-Signal
Cinch	Cb/Pb-Signal
2xCinch L+R	AUDIO OUT
2xCinch L+R	AUDIO IN 1
Presa jack 3,5mm	AUDIO IN 2
2xCinch L+R	AUDIO IN 3
Presa ingresso Cinch IN 1	Audio digitale
Presa ingresso Cinch IN 2	Audio digitale
Presa uscita Cinch OUT	Audio digitale
Presa SYSTEM, 9 poli	AUDIO
Presa jack link infrarossi	3,5 mm
Presa jack RC5/RC6	2,5 mm
Presa di servizio	a 8 poli
Collegamento DVI	ingresso digitale
Ingresso VGA	tramite presa DVI con adattatore opzionale
Presa CTRL	per comando sostegno rotante

Ⓔ Datos técnicos

Datos mecánicos

Articos 55 HD	**nœmero de referencia 63403**
Dimensiones (cm)	136,9 x 103,5 x 52 (A xA x P)
Peso (kg)	76,5
Tecnología	1-Panel DLP Optical System
made by Carl Zeiss	
Formato de imagen	16 : 9
Diagonal visible de imagen	140 cm
Formato pixel	1280 x 720 progresivo
Humedad relativa del aire	20 ... 80%
	sin condensación
Presión del aire 800 ... 1114 HPa	(0 ... 3000 m NN)

Datos eléctricos

Denominación de chasis	R 2550
Digital Light Processing™ Technology	
Lámpara de proyección de	120 vatios de larga duración
Suministro de corriente	desde 120 V hasta 240 V / 50-60Hz
Consumo de potencia	190 vatios
Modo de espera	(Standby) < 3 vatios
Temperatura ambiente	0º - 40º Celsius
Full Digital	AMD / DNC ajustable
Sintonizador VHF/UHF/ Cable	
(Hiperbanda 8 MHz)	desde 42 MHz hasta 860 MHz
Memoria de volumen de programas	220
con descodificador DVB	1470
Normas de TV	PAL-B/G, PAL-D/K,
	PAL-I, PAL-L
	PAL M/N, PAL 60
	Secam B/G, D/K, L
	NTSC / NTSCV
Teletexto	Hi-Text (nivel 2.5)
Normas de sonido	mono/est reo/2-Ton
	Nicam B/G, L, I
Potencia acústica nominal	2 x 20 vatios / 4 Ohm
Potencia acústica musical	2 x 40 vatios / 4 Ohm
Altavoces	2 unidades conectadas
Sonidos agudos	Ø 50 mm cœpula
Sonidos graves	Ø 104 mm

Conexiones (lado izquierdo de la carcasa)

Entrada de vídeo S Mini-DIN (AVS)	SVHS / Hi 8 /
	VHS / 8 mm
Entrada de vídeo Cinch (AVS)	VHS / 8 mm
Entradas de sonido Cinch	L + R
Conexión de auriculares	
Clavija	6,3 mm 32 - 200 Ohm

Conexiones (parte posterior)

Hembrilla IEC 75 Ohm		antena / cable/PIP
EURO-AV 1:	Vídeo IN	SVHS / Hi 8 /
		VHS / 8 mm
	Vídeo OUT	SVHS / Hi 8 /
		VHS / 8 mm
	Audio IN/OUT	L + R
EURO-AV 2:	Vídeo IN	SVHS / Hi 8 / RGB /
	VHS / 8 mm	
	Vídeo OUT	(SVHS / Hi 8
		sólo para SVHS Link Plus)
		VHS / 8 mm
	Audio IN/OUT	L + R
EURO-AV 3:	Vídeo IN/OUT	SVHS / Hi 8 / RGB /
		YUV / VHS / 8 mm
	Audio IN	L + R

Componentes IN:	
Señal Cinch	Y
Señal Cinch	Cr/Pr
Señal Cinch	Cb/Pb
2xCinch L+R	AUDIO OUT
2xCinch L+R	AUDIO IN 1
Conector de clavijas 3,5 mm	AUDIO IN 2
2xCinch L+R	AUDIO IN 3
Conector de entrada Cinch IN 1	Digital
Conector de entrada Cinch IN 2	Digital
Conector de salida Cinch OUT	Digital
Conector SYSTEM, 9 polos	AUDIO
Conector de clavijas de conexión infraroja	3,5 mm
RC5/RC6 conector de clavijas	2,5 mm
Conector Service	8 polos
Conexión DVI	entrada digital
Entrada VGA	a trav s del conector DVI con
	adaptador opcional
Conector CTRL	para el control del pie giratorio

(NL) Technische gegevens

Mechanische gegevens

Articos 55 HD	**artikelnummer 63403**
Afmetingen (cm)	136,9 x 103,5 x 52 (b x h x d)
Gewicht (kg)	76,5
Technologie	1-Panel DLP Optical System Made by Carl Zeiss
Beeldformaat	16 : 9
Beelddiagonaal	zichtbaar 140 cm
Pixelformaat	1280 x 720 progressief
Relatieve luchtvochtigheid	20...80% Geen condensatie
Luchtdruk 800...1114 HPa	(0...3000 m NN)

Elektrische gegevens

Chassisbenaming	R 2550
Digital Light Processing™ Technology	
Projectielamp	120 watt long life
Stroomvoorziening	120 V tot 240 V / 50-60 Hz
Krachtontneming	190 watt Stand-by < 3 watt
Omgevingstemperatuur	0° - 40° Celsius
Full Digital	AMD / DNC instelbaar
Tuner VHF/UHF kabel (Hyperband 8 MHz)	42 MHz tot 860 MHz
Programmageheugen	220
met DVB-Decoder	1470
TV-normen	PAL-B/G, PAL-D/K, PAL-I, PAL-L PAL M/N, PAL 60 Secam B/G, D/K, L NTSC / NTSCV
Teletekst	Hi-tekst (Level 2.5)
Klanknormen	mono/stereo/2-Ton Nicam B/G, L, I
Nominaal vermogen audio	2 x 20 watt / 4 ohm
Muzikaal vermogen audio	2 x 40 watt / 4 ohm
Luidsprekers	2 gesloten boxen
Hoge tonen	Ø 50 mm sferische kap
Lage tonen	Ø 104 mm

Aansluitingen (linkerzijde behuizing)

Mini-DIN S-video-ingang (AVS)	SVHS / Hi 8 / VHS / 8 mm
Cinch video-ingang (AVS)	VHS / 8 mm
Cinch klankingangen	L + R
Aansluiting hoofdtelefoon	Stekker 6,3mm 32 - 200 ohm

Aansluitingen (achterzijde)

IEC-bus 75 ohm		antenne / kabel/PIP
EURO-AV 1:	Video IN	SVHS / Hi 8 / VHS / 8 mm
	Video OUT	SVHS / Hi 8 / VHS / 8 mm
	Audio IN/OUT	L + R
EURO-AV 2:	Video IN	SVHS / Hi 8 / RGB / VHS / 8 mm
	Video OUT	(SVHS / Hi 8 uitsluitend bij SVHS Link Plus) VHS / 8 mm
	Audio IN/OUT	L + R
EURO-AV 3:	Video IN/OUT	S-VHS / Hi 8 / RGB / YUV / VHS / 8 mm
	Audio IN	L + R

Component IN:	
Cinch	Y-signaal
Cinch	Cr/Pr-signaal
Cinch	Cb/Pb-signaal
2xCinch L+R	AUDIO OUT
2xCinch L+R A	UDIO IN 1
Stekkerbus 3,5mm	UDIO IN 2
2xCinch L+R	AUDIO IN 3
Cinch-ingangsbus IN 1	digitale klank
Cinch-ingangsbus IN 2	digitale klank
Cinch-uitgangsbus OUT	digitale klank
SYSTEM-bus, 9-polig	AUDIO
Infrarood-Link	stekkerbus 3,5 mm
RC5/RC6	stekkerbus 2,5 mm
Servicebus	8-polig
Aansluiting DVI	digitale ingang
Ingang-VGA	via DVI-bus met optionele adapter
Bus CTRL	voor draaivoetbesturing

(GB) Technical Specification

Physical Data

Articos 55 HD (US)	**Article no. 63404**
Technology	1-Panel DLP Rear Projection
Colors	Basalt (highgloss, matt), Platinum
Shipping Weight lbs	284.5
Weight (lbs.)	182
Dimensions (WxHxD)	54” x 41” x 19.5”
Display	
Aspect Ratio	16:9
Screen Size	55”
Pixel Format	1280 x 720
Optical Engine by	Carl Zeiss
DLPTM Technology by	Texas Instruments
Projector Lamp	120 W (Longlife)

Electrical Data

Chassis Designation	RA 2550
Power Supply	120V / 60Hz
Power Consumption	195 Watts, Standby <3 Watts
Ambient Temperature	41–104¡ F
Ambient Pressure	800-1114 HPa / 0-10,000 ft
Tuner VHF/UHF/Cable1	125 Channel
TV Standards	NTSC
Sound Standard	MTS
Rated Audio Power	2 x 20 Watts / 4 Ohm
Number of Speakers	4
Speaker Concept	Bass Reflex

Connections

Name	**Connector**	**Signal**
Audio/Video Input (front)	RCA, S-Video jack	Stereo, S-Video, Composite
Headphone Output	1/4” Stereo jack	Stereo (32 - 200 Ohm)
Antenna Input A/B	IEC socket/”F” adapter (x2)	RF (75 Ohm)
Antenna Loop Output	IEC socket/”F” adapter	RF (75 Ohm)
RS 232	DB 9	Communications Bus
CTRL	Mini DIN 9	Motor Unit Control
DVI/HDCP Input	DVI	Digital Video
VGA Input	DVI (via VGA/DVI adapter)	VGA / RGB
Audio/Video Input (rear)	3x (RCA, S-Video jack)	Stereo, S-Video, Composite
Component Input	RCA	Y/Cr/Cb, Y/Pr/Pb, Stereo
Monitor Output	RCA, S-Video jack	Stereo, S-Video, Composite
Digital Audio Input 1 (optical)	TOSLINK	S/PDIF (PCM, AC3, DTS, ...)
Digital Audio Input 2 (coaxial)	RCA	S/PDIF (PCM, AC3, DTS, ...)
Digital Audio Output (coaxial)	RCA	S/PDIF (PCM, AC3, DTS, ...)
Audio Output	RCA	Stereo (fixed/variable audio)
Service	Mini DIN 8	System Control Bus
IR-Link (Output)	Mono mini jack	Modulated Remote Commands
Audio VGA Input	Stereo mini jack	Analog Stereo
System	Connector 9-pin	Concertos Center Channel

Anschlussplan Loewe Concertos Sound-System und Articos
Cable diagram Loewe sound systems Concertos and Articos

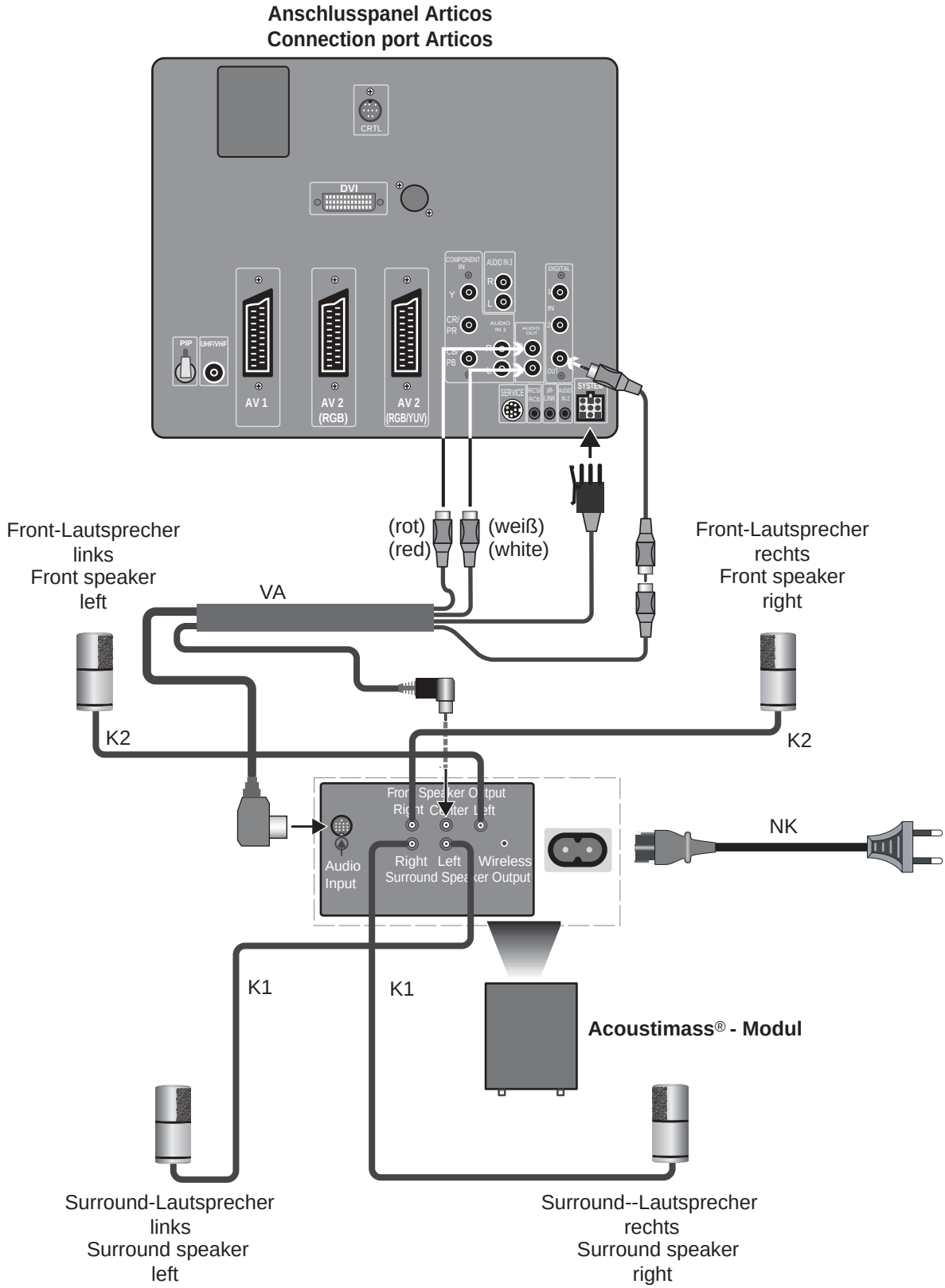

Anschlussplan Loewe Concertos Sound-System und Articos (US)
Cable diagram Loewe sound systems Concertos and Articos (US)

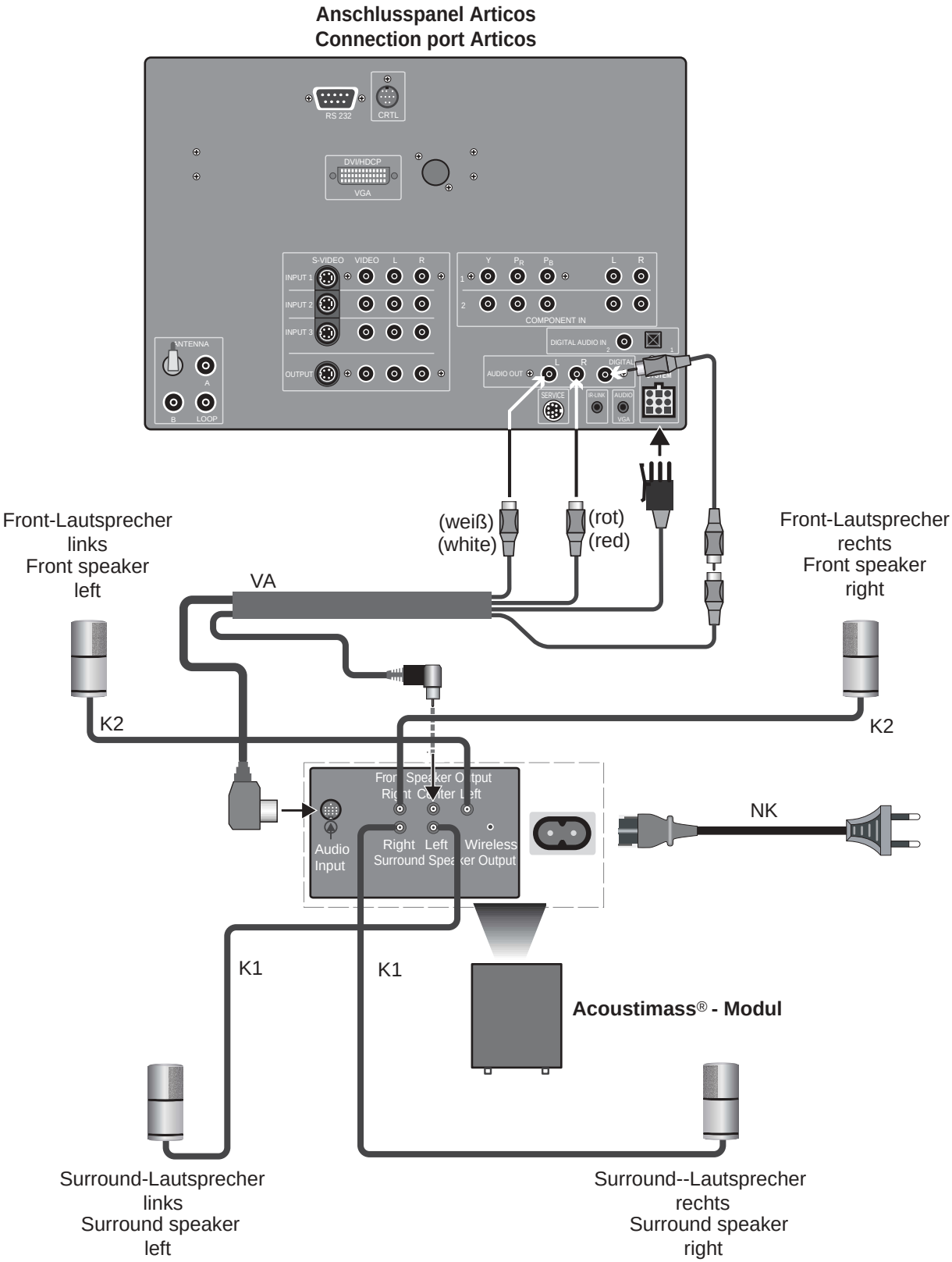

Anschlussplan Loewe Certos/Concertos Sound-System und Articos
Cable diagram Loewe sound systems Certos/Concertos and Articos

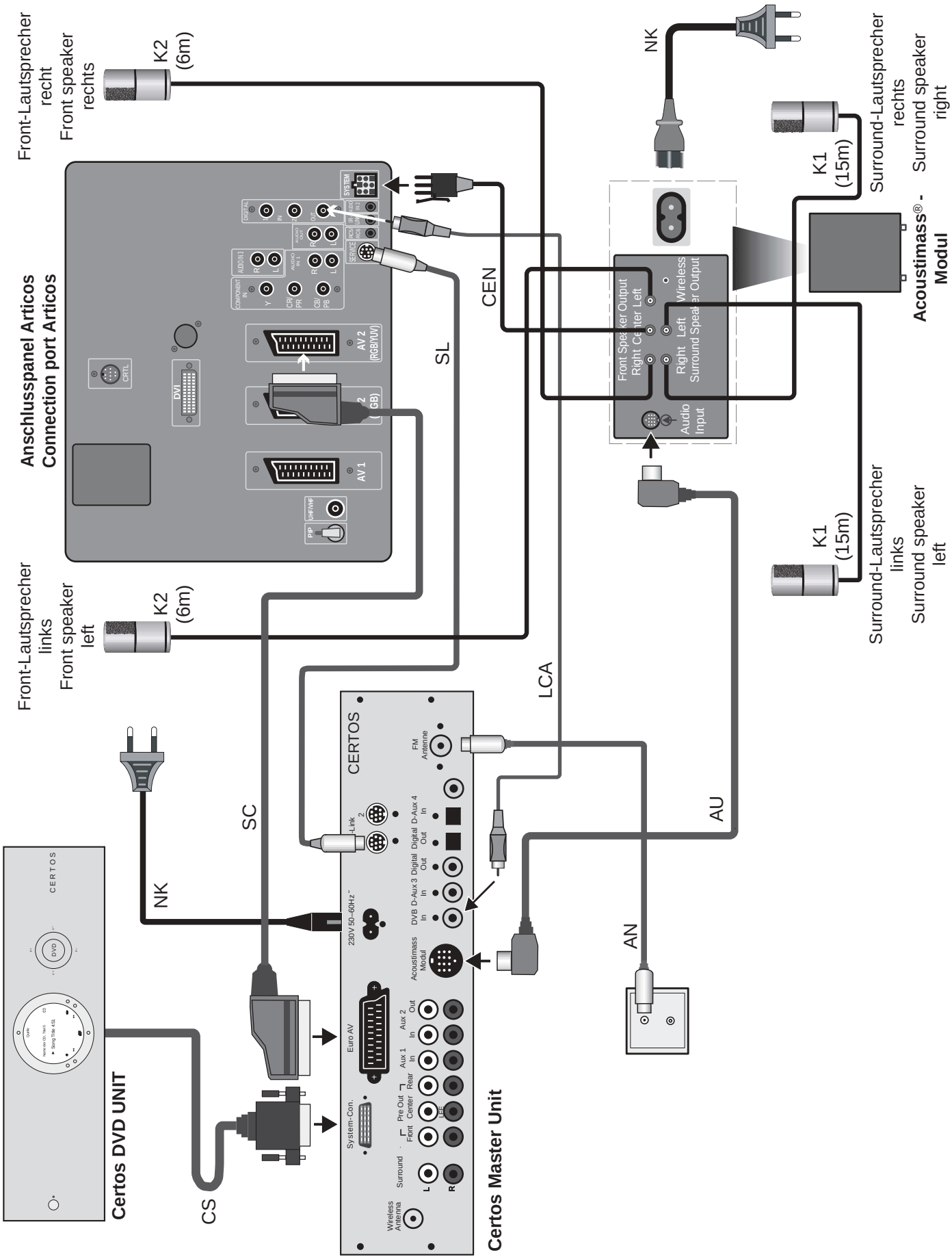

Cable diagram Loewe sound systems Certos/Concertos and Articos (US)

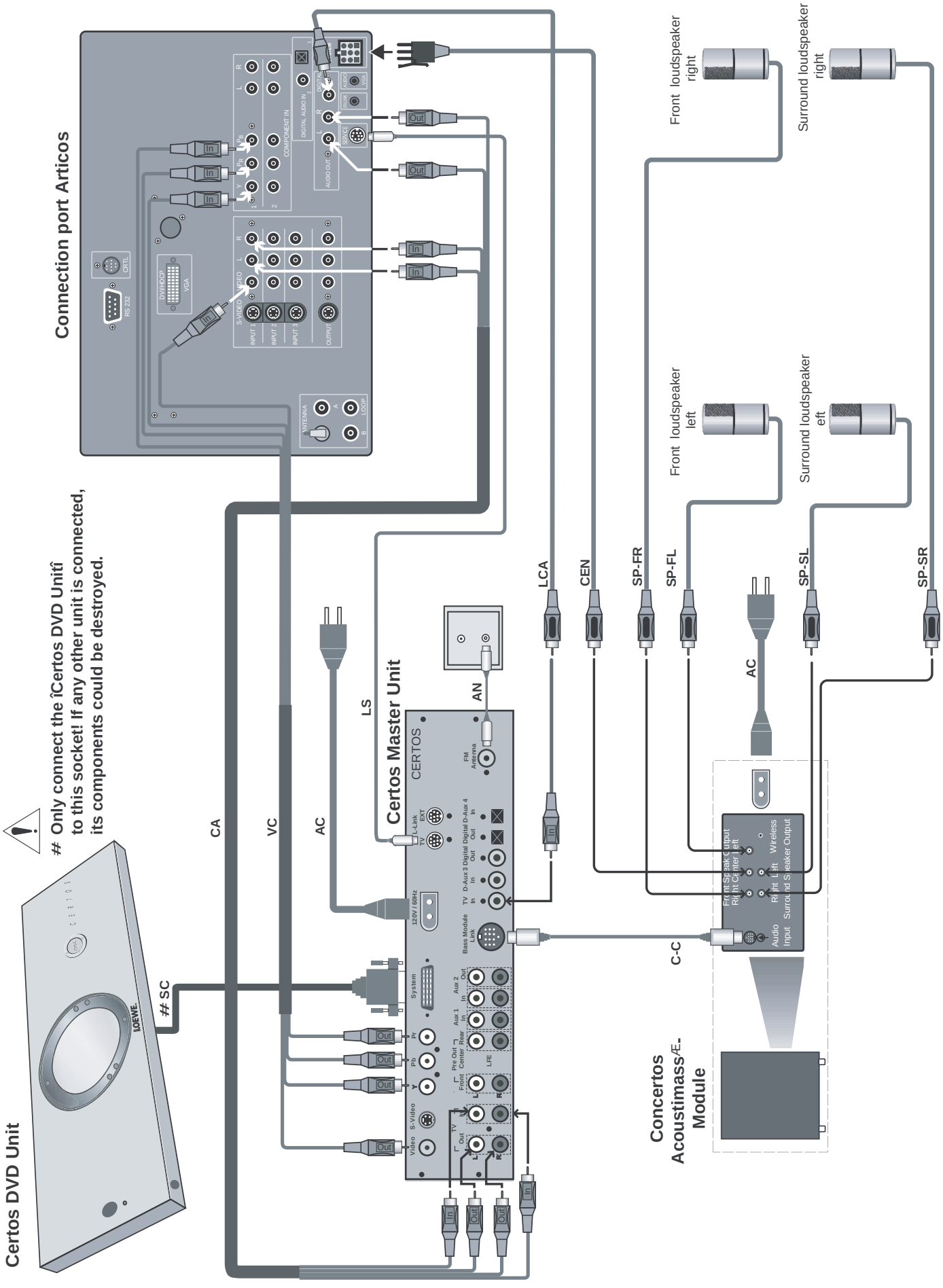

Verkabelungsplan • Wiring diagram (Articos 55 HD)

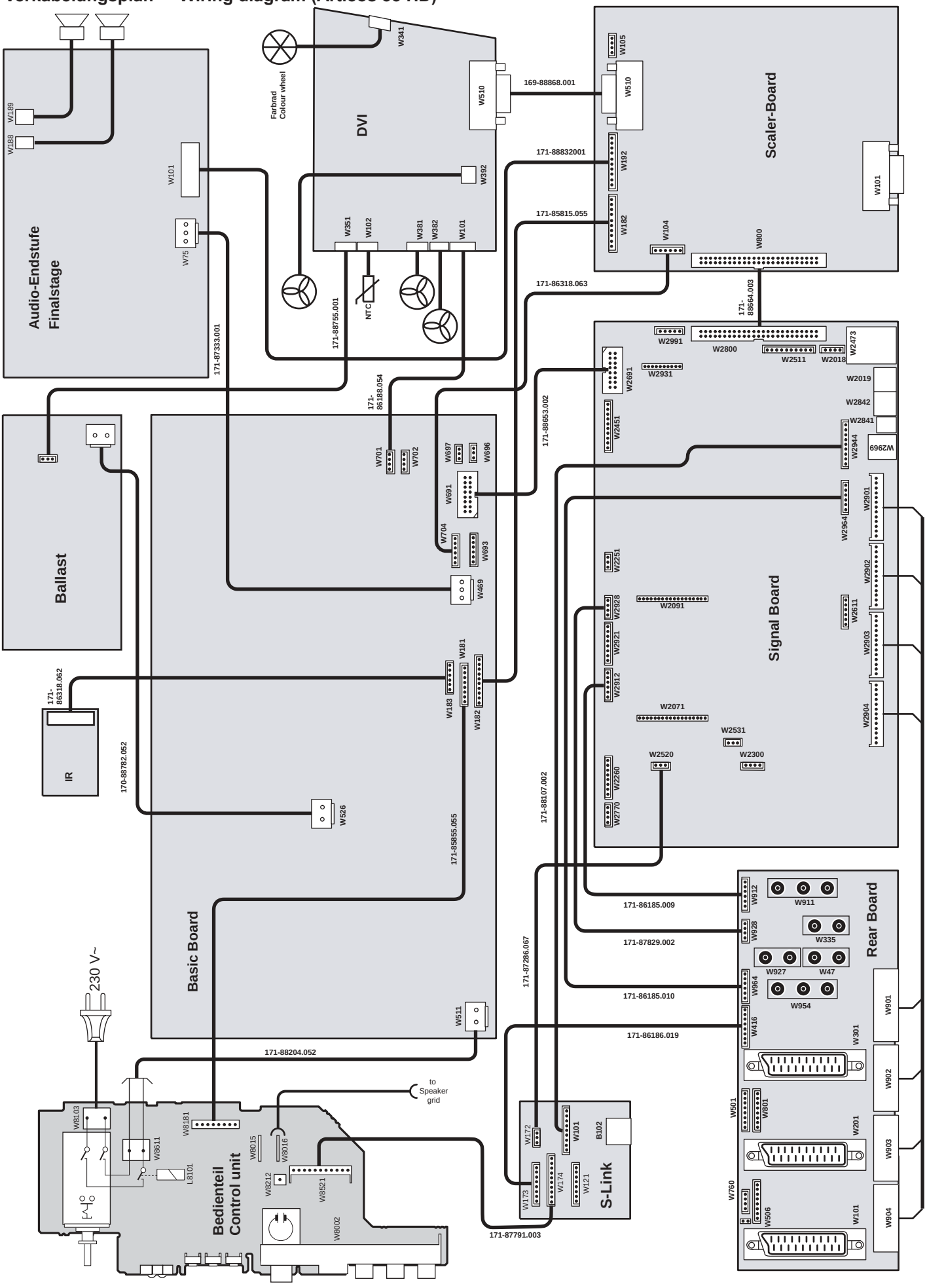

Verkabelungsplan • Wiring diagram Articos 55 HD US

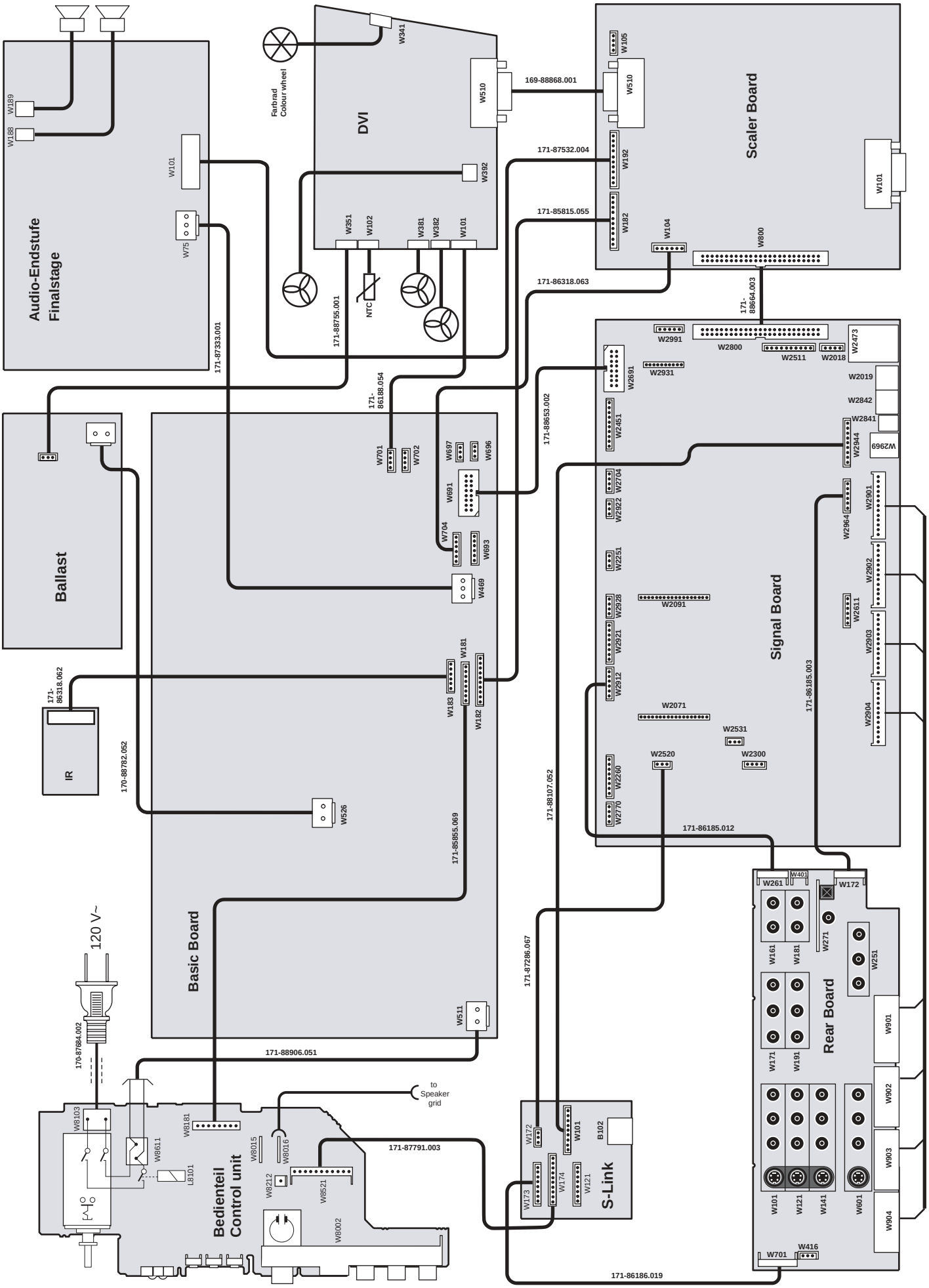

Verdrahtungsplan DVB • DVB Cable diagram

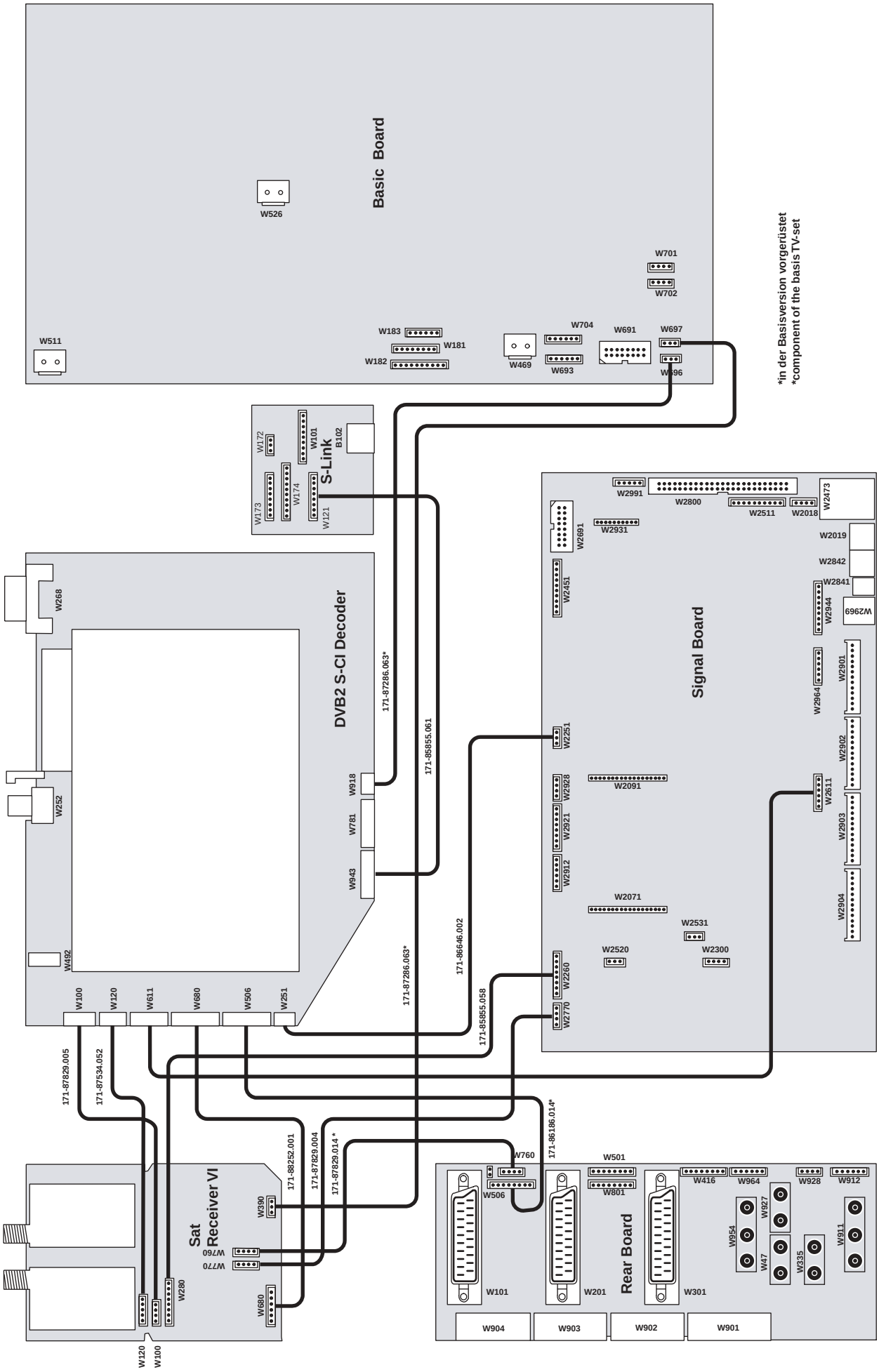

Service Menü • Service menu • Menu de service • Menu di servizio • Menú SERVICE • Service menu (R2550, RA2550)

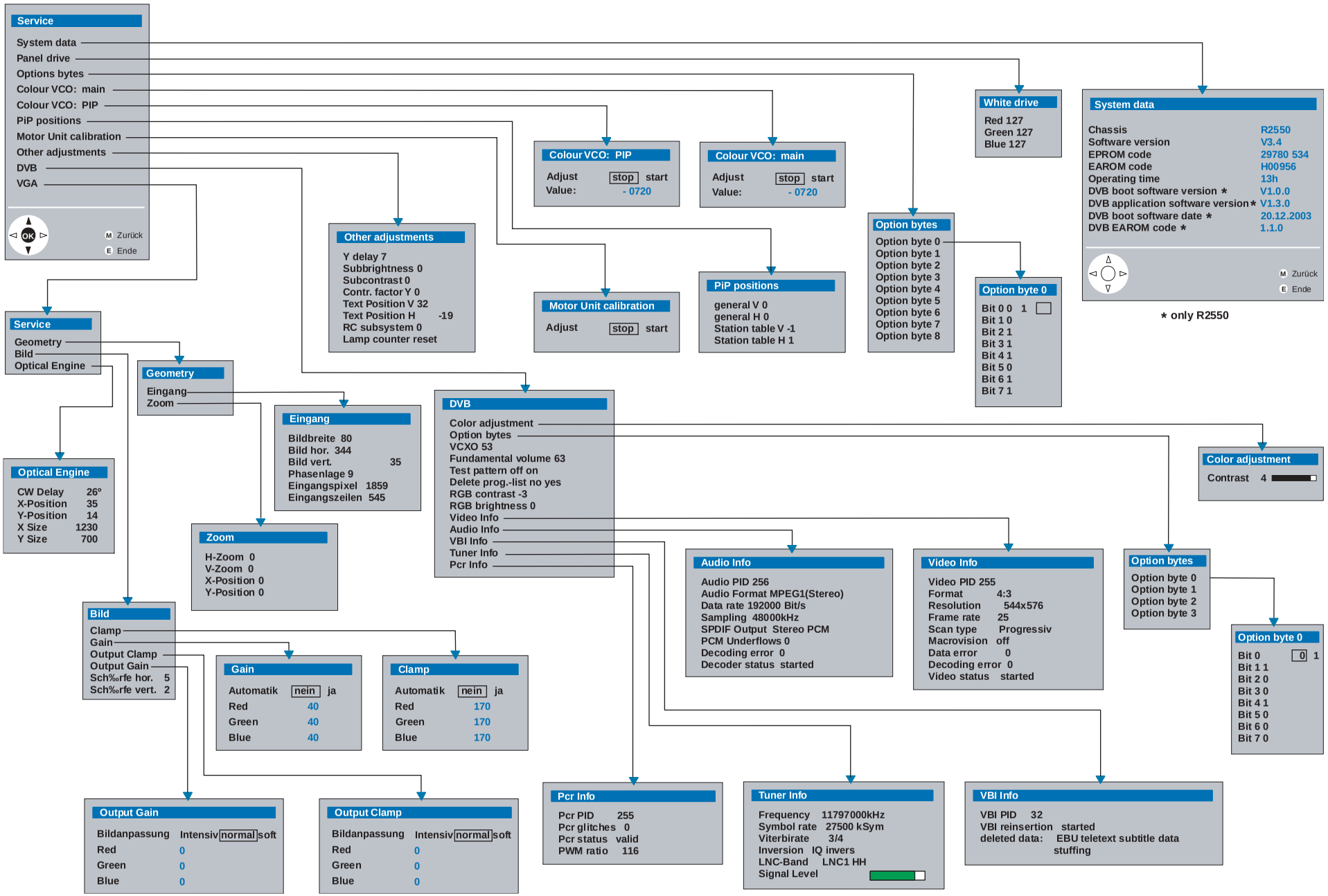

Abgleichfunktion Alignement function Fonction d'alignement Funzione di comp Función de ajuste. Afstemmingsfuncties	Bit-Nr. No. N°. No. No. Nr.	Bedeutung Meaning Signification Significato Significación Betekenis	"0"	"1"	Einstellung ab Werk Adjusted in the factory Réglage en usine Registrazione in fabbrica Adjuste en fábrica Instelling af fabriek
Byte 0	**0**	Terrestrischer Tuner	BGDK	Multinorm	**1**
	1	EPG Programmfilter EPG Programme filter	aus off	ein on	**0**
	2	ZAP^{2}TEXT	nein no	ja yes	**0**
	3	Rotations Modul	nein no	ja yes	**0**
	4	LOEWE SYSTEMS-Gerät LOEWE SYSTEMS TV set	nein no	ja yes	**0**
	5	Blaubild ohne Signal Blue picture w/o signal	ja yes	nein no	**0**
	6	VGA Modul	nein no	ja yes	**1**
	7	TVA	nein no	ja yes	**0**
Byte 1	**0**	Zeitgest. Progr. Umschaltung Timing program change	ja yes	nein no	**0**
	1	Sync Slicer VPC	nicht beschrieben not descripted	beschrieben descripted	**0**
	2	WSS-Auswertung im VCR-Mode WSS Detection in VCR mode	nein no	ja yes	**1**
	3	VPC Sync Slicer Pegel im TV-Mode VPC Sync Slicer level in TV mode	TV-Pegel TV level	VCR-Pegel VCR level	**0**
	4	HMM-Sofort Start HMM immediately start	nein no	ja yes	**0**
	5	OEM Gerät OEM TV set	nein no	ja yes	**0**
	6	AMD für Film-Mode bei TV/DVB AMD for mocie mode with TV/DVB	gesperrt disabled	zugelassen permitted	**1**
	7	bei VGA Synch Ausfall at VGA mode sync failure	umschalten in TV-Mode flick in TV mode	VGA-Mode beibehalten keep VGA mode	**1**
Byte 2	**0**	FLOF	ein on	aus off	**0**
	1	EPG Erstes Einschalten EPG First use	nein no	ja yes	**1**
	2	Lock Mode VPC	nein no	ja yes	**1**
	3	Dunkeltastung beim Umschalten Blanking by switch-over	nein no	ja yes	**0**
	4	Lautstärkepegel MSP-Ausgang Volume level MSP output	normal normal	+9dB (HW-Änderung BB) +9dB (HW modification BB)	**0**
	5	AGC Speicher AGC memory	aus off	ein on	**1**
	6	Reaktionszeit auf FB-Befehle Reaction time of remote orders	schnell fast	langsam slow	**0**
	7	WSS (Wide Screen Signalling Bits)	ausgewertet evaluated	nicht ausgewertet not evaluated	**0**
Byte 3	**0**	Bildröhrenformat (Standardwerte) Picture ratio (standard values)	zulassen approved	gesperrt blocked	**0**
	1	Bildgröße Picture size	4:3	16:9	**1**
	2	EPG (analog) Nacht-Aktualisierung EPG (analogue) night update	aus off	ein an	**1**
	3	frei free	——	——	**0**
	4	Abschalten nach Programmschluss Switching off after channel closes	ja yes	nein no	**0**
	5	Fabrik Modus Factory mode / Tanberg Monitor	aus off	ein on	**0**
	6	PIP-Hintergrundfarbe im VGA-Mode PIP background at VGA mode	schwarz black	PIP-Rahmenfarbe PIP frame colour	**1**
	7	Menü "erstes Einschalten" "First use" Menu	nein no	ja yes	**1**

Abgleichfunktion Alignement function Fonction d'alignement Funzione di comp Función de ajuste. Afstemmingsfuncties	Bit-Nr. No. N°. No. No. Nr.	Bedeutung Meaning Signification Significato Significación Betekenis	"0"	"1"	Einstellung ab Werk Adjusted in the factory Réglage en usine Registrazione in fabbrica Adjuste en fábrica Instelling af fabriek
Byte 4	**0**	Einschalverzögerung switch on delay	nein no	1s nach Regelung ein 1s after adjustment on	**1**
	1	Autom. Lautstärke Regelung (AVC) Automatic Volume Control (AVC)	langsam slow	schnell fast	**0**
	2	Abschaltvorhang Power down cycle	ja yes	nein no	**0**
	3	Dunkeltastung beim Umschalten (DVB) Blanking by switch-over (DVB)	nein no	ja yes	**0**
	4	Autom. Filmkennung (AMD) AMD switch-over (AMD)	schnell fast	langsam slow	**1**
	5	Warmlaufmodus Warm-up mode	ein on	aus off	**1**
	6	Movie Fall Back Mode (BESIC)	aus off	ein on	**0**
	7	Standbild im VCR Mode "Pause" Sill picture in VCR Mode "breake"	ja yes	nein no	**1**
Byte 5	**0**	SUB 27 Befehle SUB 27 orders	ausgewertet evaluated	nicht ausgewertet no evaluated	**0**
	1	Seiten umblättern bei EPG (analog) Turning pages with EPG (analogue)	Cursor springt nach unten Cursor jumps to bottom	Cursor springt nach oben Cursor jumps to top	**0**
	2	50 Hz Progressiv-Darstellung 50 Hz progressive prepresentation	aus off	ein on	**1**
	3	60 Hz Progressiv-Darstellung 60 Hz progressive representation	aus off	ein on	**0**
	4	HMM-Mode	nein no	ja yes	**0**
	5	EPG Test-Mode EPG test mode	aus off	ein on	**0**
	6	HMM-Tastatur HMM keyboard	alt old	neu new	**1**
	7	Idle-Mode in Stand By	nein no	ja yes	**1**
Byte 6	**0**	HDLC	time out	no time out	**0**
	1	Klemmverst. RGB-Eingang VPC blank amplifier RGB input VPC	ACh	AOh	**1**
	2	Funktion an Port 2.14 (M2 Pin 11) Function at port 2.14 (M2 pin 11)	Tastensperre für TVO Key lock for TVO	Entmagnetisierung Demagnetisstion	**0**
	3	EPG RAM Test	ja yes	nein no	**0**
	4	VT Time out nach 10 Minuten VT time out after 10 minutes	ja yes	nein no	**0**
	5	autom. Einschalten im VT-Modus automatic switch on in VT mode	nein no	ja yes	**0**
	6	Indikation des Film-Modes Indication of film mode	nein no	nein no	**0**
	7	VT-Unterseiten Mode VT subpages mode	normal normal	aus off	**0**
Byte 7	**0**	BESIC Version Factory mode	<V5..2	>V5..2	**0**
	1	Ton für HMM-Geräte Sound for HMM sets	VGA-Ton intern VGA sound internal	VGA-Ton iexern VGA sound iexternal	**1**
	2	Suchlauf Search	normal normal	Test Mode (Feinsuchlauf) test mode (fine search)	**1**
	3	Bevorzugter Tuner (DVD bestückt) preferred tuner (with DVD)	zus. SAT-Tuner (normal) additional SAT tuner (normal)	Haupt SAT-Tuner main SAT tuner	**0**
	4	Auswertung der 16:9-Schaltspannung Assessing the 16:9 switching voltage	ja yes	nein no	**0**
	5	Bevorzugter Tuner (ohne DVD) preferred tuner (without DVD)	Haupt-SAT-Tuner (normal) main SAT tuner (normal)	zus. SAT-Tuner (keine Tonstörung) additional SAT tuner (no sound impairment	**0**
	6	AV2-Monitor für C-Bax AV2 monitor for C Box	gesperrt disabled	freigegeben enabled	**1**
	7	ext. HF-Sender für Ton ext. RF transmitter for sound	ja yes	nein no	**1**

Abgleichfunktion Alignement function Fonction d'alignement Funzione di comp Función de ajuste. Afstemmingsfuncties	Bit-Nr. No. N°. No. No. Nr.	Bedeutung Meaning Signification Significato Significación Betekenis	"0"	"1"	Einstellung ab Werk Adjusted in the factory Réglage en usine Registrazione in fabbrica Adjuste en fábrica Instelling af fabriek
Byte 8	**0**	Fabrik Mode Factory mode	nein no	ja yes	**0**
	1	Klinkenstecker Audio-in fJack plug audio in	nicht bestückt without	bestückt with	**1**
	2	Frontbuchse Front socket	bestückt with	nicht bestückt without	**0**
	3	Dyn. Bass (MICRONAS)	aus off	ein on	**0**
	4	75 Hz Interface-Darstellung 75 Hz interface representation	aus off	ein on	**0**
	5	Blue Stretch	aus off	ein on	**0**
	6	Black Stretch	aus off	ein on	**0**
	7	Auto. Wiedereinschalten (Warm Up) Auto. on (warm up)	aus off	ein on	**0**
Byte 9	**0**	Chroma-Ausgang an SCART 1 Chroma output to SCART 1	Pin 7	Pin 15	**0**
	1	ext. Receiver im VT-Mode ext. receiver in VT mode	autom. Kanalkennung autom. channel identification	keine autom. Kanalkennung no autom. channel identification	**0**
	2	Halbbildkennung im VCR-Mode Half-picture identification in VCR mode	Automatik ein Automatic on	Automatik aus Automatic off	**0**
	3	VGA-Toneingang VGA sound input	Klinkenstecker Jack plug	SCART 1 AV1	**0**
	4	DiSEqC Telegramm DiSEqC telegram	auch für unben. Schalter also for unused switch	nicht für unbenutzten Schalter no for unused switch	**0**
	5	Detaillierte Signalinformation Detail signal information	nein no	ja yes	**0**
	6	Algorithmus für VT-Augenhöhe Algorithmus for VT eye-level	verbessert ab M2 B12 improved from M2 B12	nicht verbessert no imprroved	**0**
	7	Drehfußsteuerung via RC5 Rotary foot control via RC5	nein no	ja yes	**0**
Byte 10	**0**	Konvertierung 50i>60p Convertibility 50i>60p	nein no	ja yes	**0**
	1	Synchronmodus im Scaler Synchron mode in scaler	warten wait	springen jump	**0**
	2	Lüfterbetrieb Fan operation	Automatik Automatic	immer ein always on	**0**
	3	bei „Ton über TV" at „Sound via TV"	Cinchaus. nicht gemutet Cinch out not muted	Cinchausgang gemutet Cinch out muted	**1**
	4	frei free	----	-----	**0**
	5	frei free	----	----	**0**
	6	frei free	----	----	**0**
	7	frei free	----	----	**0**

Option Byte-Tabelle • Option Byte Table • Tableau Option Byte **US Version**
Tabella Byte delle Opzioni • Tabla de bytes de opciones • Option Bytes tabel

Abgleichfunktion Alignement function Fonction d'alignement Funzione di comp Función de ajuste. Afstemmingsfuncties	Bit-Nr. No. N°. No. No. Nr.	Bedeutung Meaning Signification Significato Significación Betekenis	"0"	"1"	Einstellung ab Werk Adjusted in the factory Réglage en usine Registrazione in fabbrica Adjuste en fábrica Instelling af fabriek
Byte 0	**0**	HDLC timeout	no	yes	**0**
	1	VPC Synch slicer threshold	not written	written	**0**
	2	Read sidepanel from	PROM (new BESIC)	EAROM	**1**
	3	Motor Unit	possible	imposible	**1**
	4	Available TV-Mode	480 lines proscan	960 lines inerlace	**0**
	5	Blue picture w/o signal	yes	no	**0**
	6	VGA Modul	yes	no	**0**
	7	VGA switch	delayed	undelayed	**1**
Byte 1	**0**	Timer controlled prg. switch	yes	no	**0**
	1	Auto YC on AV input	yes	no	**0**
	2	Text mode	black backround	drop shadow	**0**
	3	Close caption	enhanced attr. off	enhanced attr. on	**0**
	4	PIP	frame mode	field mode	**0**
	5	16:9 sets and PIP on	pan/cin/zoom possible	pan/cin/zoom impossible	**0**
	6	Auto PAL/NTSC via AV	no	yes	**1**
	7	free	—	—	**0**
Byte 2	**0**	Auto color PAL/NTSC	only NTSC	always on (only for fafactory use)	**1**
	1	Indicate movie mode	no	yes	**0**
	2	Lock Mode VPC	no	via side panel color	**0**
	3	Blanking program switch	yes	no	**0**
	4	Fan is always on	yes	no	**0**
	5	AGC memory	disabled	enabled	**1**
	6	Reaction to delayed commands	fast	slow	**0**
	7	Auto movie source detection	no	yes	**1**
Byte 3	**0**	Default aspect ratio	enabled	disabled	**1**
	1	Picture size	4:3	16:9	**1**
	2	Rotations coil	no	yes	**1**
	3	Split screen vert. delay	disabled	enabled	**0**
	4	Switch-off autom. (w/o Sync)	yes	no	**0**
	5	Warm up mode	off	on	**0**
	6	OSD clamping	old	new	**1**
	7	First switch-on	no	yes	**1**

Option Byte-Tabelle • Option Byte Table • Tableau Option Byte
Tabella Byte delle Opzioni • Tabla de bytes de opciones • Option Bytes tabel

Abgleichfunktion Alignement function Fonction d'alignement Funzione di comp Función de ajuste. Afstemmingsfuncties	Bit-Nr. No. N°. No. No. Nr.	Bedeutung Meaning Signification Significato Significación Betekenis	"0"	"1"	Einstellung ab Werk Adjusted in the factory Réglage en usine Registrazione in fabbrica Adjuste en fábrica Instelling af fabriek
Byte 4	**0**	Sound ident info OSD active	no	yes (only for test)	**0**
	1	Auto volume control (AVC)	slow	fast	**0**
	2	50Hz progressive scan	disabled	enabled	**0**
	3	60Hz progressive scan	disabled	enabled	**1**
	4	Auto movie detect (AMD)	fast	slow	**1**
	5	Warm up mode	on	off	**1**
	6	Chroma inverter BESIC	on	off	**0**
	7	SUB 27 commands via IR	inhibit	uninhibited	**0**
Byte 5	**0**	Scan velocity modulation	disabled	enabled	**1**
	1	Welcome screen	from EPROM	from EAROM	**0**
	2	Output selected	monitor	tuner	**0**
	3	Basic board	Q2460	Q2400	**0**
	4	VGA synch switching	old	new	**1**
	5	Values for upconversion	automatic	manual recursion	**0**
	6	Input locking source	input1	VGA	**0**
	7	Input locking	off	on	**0**
Byte 6	**0**	Gamma-settings (1080i)	from EAROM	from EPROM	**0**
	1	sync source for VGA 480p	external	VPC	**0**
	2 ✳	input locking source mask	input 1 component input	VGA input DVI	**0**
	3 ✳	input locking source mask	input 1 VGA input	component input DVI	**0**
	4	reserved	—	—	**0**
	5	free	—	—	**1**
	6	Component input	no autosense	autosense	**0**
	7	Subbrightness and subcontrast for YUV 480i	enabled	disabled	**0**

Option Byte 6	Bit 2 ✳	Bit 3 ✳
input 1	**0**	**0**
component input	**0**	**1**
VGA input	**1**	**0**
DVI	**1**	**1**

Baugruppenübersicht • Components chart

Articos 55 HD

Baugruppen / Components		Articos 55 HD 63403x62	Articos 55 HD US 63404x20	Geräte Typ TV set type Art.-Nr. Art.-N°.
Basic Board	396-88633.050	●	●	Geräte Baugrupen Set components
Signal Board	396-88557.055	●		
Signal Board	396-88557.065		●	
Rear Board	396-88558.050	●		
Rear Board	396-88681.050		●	
Scaler Board	396-88882.055	●		
Scaler Board	396-88882.065		●	
Hyperband Tuner 8 MHz, M [1]	260-87271.051	●		
Hyperband Tuner 8 MHz, MPAS [2]	260-87345.060	●		
Hyperband Tuner 8 MHz, US [3]	260-87346.050		●	
Hyperband Tuner 8 MHz, USP99 [4]	260-87507.051		●	
DIS Modul	396-88804.050	●	●	
S-Link-Erweiterung • S link expansion	396-88857.050	●		
S-Link-Erweiterung • S link expansion	396-88857.065		●	
Bassverstärker • Subwoofer Amplifier	396-88493.061	●	●	
Bedienteil • Control board	396-88226.053	●		
Bedienteil • Control board	396-88668.051		●	
Optische Bildröhre vorm. • Optical CRT prem.	345-88748.050	●	●	
DVI Extension	396-88682.050	●	●	
EVG 120W	291-31153.050	●	●	
Frequenzweiche • Cross-over network	396-85729.078	●	●	
IR-Empfänger • IR Receiver	396-87476.051	●	●	
IR- Geber ”RC2” • Remote Handset ”RC2”	009-89500.A50	●		
IR- Geber ”RC2” • Remote Handset ”RC2”	009-89510.A00		●	
Dolby Digital AC 3	396-88828.050	●	●	
Audio Erweiterung • Audio Extension	396-88234.050/051	●	●	
Audio Erweiterung • Audio Extension	396-88678.050	●	●	
HDR	009-88801.050	●	●	

[1] **M**ultisystem for entertainment • [2] **M**ultisystem with **A**ntenna **S**plitter • [3] **US**A type for consumer electronic • [4] **US**A-**P**IP type for consumer electronic

ARTICOS 55 HD (EU) 63403x62

Pos.Nr. Item N°.	Bestell-Bezeichnung	Description List Part N°.	Bestell-Nr.	Var. Var.
	BAUGRUPPEN	**UNITS**		
U250	optische Bildröhre ARTICOS 55 vorm.	Picture Tube	345-88748.050	
U2550	Basic Board kpl. R2550/RA2550	P.C.B	396-88633.050	
U2551	Signal Board kpl. R2550	P.C.B	396-88557.055	
U350	SPHEROS IR-Empfänger SVGA	P.C.B	396-87476.051	
U360	elektronisches Vorschaltgerät 120W	Scaffolding Access.	291-31153.050	
U730	Rearboard kpl. S2550/R2550	P.C.B	396-88558.050	
U740	Scaler-Board kpl. R2550/RA2550	P.C.B	396-88882.050	
U760	S-LINK-Erweiterung kpl. R2550	P.C.B	396-88857.050	
U800	Baß-Endstufe 40W Mono kpl. R2550/RA2550	P.C.B	396-88493.061	
U8211	Modul-Bedienteil R2550 kpl.	P.C.B	396-88226.053	
	DRUCKSACHEN	**OPERATING INSTRUCTIONS**		
633	BAN -D-I ARTICOS 55 EU	Operating Instructions	233-31599	
634	BAN -NL-F ARTICOS 55 EU	Operating Instructions	233-31599.010	
635	BAN -GB-E ARTICOS 55 EU	Operating Instructions	233-31599.020	
638	LOEWE Marketing-Card	Indicating Sheet	240-31294	
639	Garantie- und Service-Card Version A	Indicating Sheet	240-31300	
640	Rückumschlag Marketing-Card	Indicating Sheet	240-31298	
641	Folder - MEHR ERLEBEN MIT SYSTEM	Indicating Sheet	240-31197.001	
	GERÄTEBEIPACK	**SET SUPPLEMENT**		
643	Mikrozelle 1,5V Alkali-Mangan	Accumulator	280-13411	
645	Reinigungsmittel 100ml	Detergent	209-29719	
646	Reinigungsset - Tuch+Handschuhe	Protective Covering	254-29720	
N110	Verbindungsltg. UL DVI-DUAL LINK 600lg.	Connecting Cable	169-88868.001	
U9111	RC2 platin	Transmitter	263-89500.A00	
	VERPACKUNGSMATERIAL	**PACKING MATERIAL**		
600	Schachtel/Ring ARTICOS 55	Packing Case	245-88728.002	
601	Flachpalette (einweg) ARTICOS 55	Wood Foot Rack	259-88872.001	
603	Schachtel/Stülpdeckel ARTICOS 55	Packing Case	245-88728.012	
607	Kippindikator TIP-N-TELL	Adhesive Label	220-31658	
610	Verpackungsformteil ARTICOS 55	Cushion-Set	252-88729.050	
630	Verpackungskarton für BAN+FB RC2	Packing Case	245-88422.004	
631	Sicherheitsetikett 40mm	Adhesive Label	220-26766	
632	PE-Schutzeinlage 265x480x1	Protective Packing	253-26221.001	
	VERBINDUNGSLEITUNG	**CONNECTING CABLES**		
N 26	Anschlußleitung UL 2-pol. 265lg. ws	Power Cord	170-88782.052	
N103	Netzkabel Dr. 3400mm 0,75 sw JST	Power Cord	170-29158.003	
	KNÖPFE	**BUTTONS**		
G320	Tastenset für Servicefunktionen graphit	Button	682-87685.204	C62
G320	Tastenset für Servicefunktionen graphit	Button	682-87685.204	M62
G320	Tastenset für Servicefunktionen platin	Button	682-87685.209	A62
G330	Knopf graphit AVENTOS	Button	682-88528.004	C62
G330	Knopf graphit AVENTOS	Button	682-88528.004	M62
G330	Knopf platin AVENTOS / ARTICOS 55	Button	682-88528.009	A62

ARTICOS 55 HD (EU) 63403x62

Pos.Nr. Item N°.	Bestell-Bezeichnung	Description List Part N°.	Bestell-Nr.	Var. Var.
	GEHÄUSETEILE	**CABINET MOUNTING**		
100	Fuß Aluminium ARTICOS	Foot	783-88215.002	
102	Formstanzteil 38x20mm	Damping Rubber	406-29728	
103	Schallwand ARTICOS 32 vormontiert	Front Cover	776-88195.050	
105	Bodenplatte ARTICOS 55	Bottom Cover	777-88641.001	
107	Spiegel groß ARTICOS 55	Window	666-88647.001	
108	Distanzprofil	Damping Rubber	406-88761.001	
111	Rückwandschraube M4x14-4.8 sw	Screw	432-31470	
115	Filzzuschnitt 25x1,65 sw	Felt Strip	414-27523	
151	Rückwandschraube M4x14-4.8 sw	Screw	432-31470	
154	Rückwandschraube M4x14-4.8 sw	Screw	432-31470	
155	Zugentlastung schwarz	Cable Binding	530-83106.102	
159	Abdeckung Lüfter schwarz ARTICOS 55	Mask	703-89058.002	
256	Halteblech schwarz für Spiegel klein	Holder	602-88642.002	
257	Spiegel klein ARTICOS 55	Window	666-88648.001	
258	Halter für Spiegelverstellung ARTICOS 55	Holder	602-88922.001	
301	Abdeckblech schwarz Bedienung ARTICOS 55	Cover	568-88635.102	
734	Abdeckung für Buchsenöffnung S2550 sw	Mask	703-88611.002	
735	Abdeckung für Buchsenöffnung sw R2550	Mask	703-89054.002	
G100	Holzgehäuse innen schwarz ARTICOS 55	Cabinet	750-88643.002	
G102	Frontscheibe basalt matt ARTICOS 55	Window	666-88639.005	
G110	Rückwand basalt-matt ARTICOS 55	Backcover	775-88646.005	C62
G110	Rückwand platin ARTICOS 55	Backcover	775-88646.009	A62
G110	Rückwand basalt-hgl. ARTICOS 55	Backcover	775-88646.015	M62
G112	Abdeckung Rückw. basalt-matt ARTICOS 55	Mask	703-88645.005	C62
G112	Abdeckung Rückwand platin ARTICOS 55	Mask	703-88645.009	A62
G112	Abdeckung Rückw. basalt-hgl. ARTICOS 55	Mask	703-88645.015	M62
G350	Ziergitter platin ARTICOS 55	Speaker Grille	708-88638.009	A62
G350	Ziergitter basalt-hgl. ARTICOS 55	Speaker Grille	708-88638.015	C62
G350	Ziergitter basalt-hgl. ARTICOS 55	Speaker Grille	708-88638.015	M62
	SPULEN/LAUTSPRECHER	**COILS,SPEAKERS**		
190	Lüfter F8025S12B ohne Kont.	Motor	269-27521	
192	DC-Lüfter 80x80x25 inkl. Kabel vorm.	Motor	269-31814.050	
193	DC-Lüfter 92x92x25 inkl. Kabel vorm.	Motor	269-31822.050	
L101	Ferritkern geschlossen	Ferrite Bead	522-28128	
L102	Klappferrit rund 10mm schwarz	Ferrite Bead	522-31628	
L103	Ferritkern Ring R26x14,5x5,5 FE323	Ferrite Bead	522-29824	
	ALLGEM. MECHAN. TEILE	**COMMON MECHANICAL PARTS**		
H1510	Bolzen UNC HFS-4S-B1WM Fa. JST	Bolt	579-28072	

CAUTION

These servicing instructions are for use by qualified service personnel only. To reduce the risk of electric shock, do not perform any servicing other than that contained in the operating instructions unless you are qualified to do so."

Articos 55 HD (USA) 63404x20

Pos.Nr. Item N°.	Bestell-Bezeichnung	Description List Part N°.	Bestell-Nr.	Var. Var.
	BAUGRUPPEN	**UNITS**		
U250	optische Bildröhre ARTICOS 55 vorm.	Picture Tube	345-88748.050	
U2550	Signal Board kpl. RA2550	P.C.B	396-88557.065	
U2550	Basic Board kpl. R2550/RA2550	P.C.B	396-88633.050	
U350	SPHEROS IR-Empfänger SVGA	P.C.B	396-87476.051	
U360	elektronisches Vorschaltgerät 120W	Scaffolding Access.	291-31153.050	
U730	Rearboard kpl. SA2550/RA2550	P.C.B	396-88681.050	
U740	Scaler-Board kpl. R2550/RA2550	P.C.B	396-88882.050	
U760	S-LINK-Erweiterung kpl. RA2550	P.C.B	396-88857.065	
U800	Baß-Endstufe 40W Mono kpl. R2550/RA2550	P.C.B	396-88493.061	
U8211	Bedienteil kpl. RA2550	P.C.B	396-88668.051	
	DRUCKSACHEN	**OPERATING INSTRUCTIONS**		
633	BAN -GB- ARTICOS 55 US	Operating Instructions	233-31585.020	
634	BAN -F- ARTICOS 55 US	Operating Instructions	233-31585.040	
635	BAN -E- ARTICOS 55 US	Operating Instructions	233-31585.050	
639	Garantie u. Antwortkarte A24/244	Guaranty Card	224-28352.002	
	GERÄTEBEIPACK	**SET SUPPLEMENT**		
643	Mikrozelle 1,5V Alkali-Mangan	Accumulator	280-13411	
645	Reinigungstuch 30x30	Protective Covering	254-31107	
N110	Verbindungsl. UL DVI-Dual Link 600lg.	Connecting Cable	169-88868.001	
U9111	RC2 USA platin	Transmitter	263-89510.A00	
	VERPACKUNGSMATERIAL	**PACKING MATERIAL**		
600	Schachtel/Ring ARTICOS 55	Packing Case	245-88728.002	
601	Flachpalette (einweg) US/Austr.	Wood Foot Rack	259-88872.702	
603	Schachtel/Stülpdeckel ARTICOS 55	Packing Case	245-88728.012	
606	Sisal Hongkong-Variante	Accessories	256-26496	
607	Kippindikator TIP-N-TELL	Adhesive Label	220-31658	
610	Verpackungsformteil ARTICOS 55	Cushion-Set	252-88729.050	
630	Verpackungskarton für BAN+FB RC2	Packing Case	245-88422.004	
631	Sicherheitsetikett 40mm	Adhesive Label	220-26766	
632	PE-Schutzeinlage 265x480x1	Protective Packing	253-26221.001	
	VERBINDUNGSLEITUNG	**CONNECTING CABLES**		
N 26	Anschlußleitung UL 2-pol. 265lg. ws	Power Cord	170-88782.052	
N103	Netzkabel USA m. Drossel 3200lg.	Power Cord	170-87684.002	
	KNÖPFE	**BUTTONS**		
G320	Tastenset für Servicefunktionen graphit	Button	682-87685.204	C20
G320	Tastenset für Servicefunktionen graphit	Button	682-87685.204	M20
G320	Tastenset für Servicefunktionen platin	Button	682-87685.209	A20
G330	Knopf graphit AVENTOS	Button	682-88528.004	C20
G330	Knopf graphit AVENTOS	Button	682-88528.004	M20
G330	Knopf platin AVENTOS / ARTICOS 55	Button	682-88528.009	A20
	GEHÄUSETEILE	**CABINET MOUNTING**		
100	Fuß Aluminium ARTICOS	Foot	783-88215.002	
102	Formstanzteil 38x20mm	Damping Rubber	406-29728	
103	Schallwand ARTICOS 32 vormontiert	Front Cover	776-88195.050	
105	Bodenplatte ARTICOS 55	Bottom Cover	777-88641.001	
107	Spiegel groß ARTICOS 55	Window	666-88647.001	

Articos 55 HD (USA) 63404x20

Pos.Nr. Item N°.	Bestell-Bezeichnung	Description List Part N°.	Bestell-Nr.	Var. Var.
	GEHÄUSETEILE	**CABINET MOUNTING**		
108	Distanzprofil	Damping Rubber	406-88761.001	
111	Rückwandschraube M4x14-4.8 sw	Screw	432-31470	
115	Filzzuschnitt 25x1,65 sw	Felt Strip	414-27523	
151	Rückwandschraube M4x14-4.8 sw	Screw	432-31470	
154	Rückwandschraube M4x14-4.8 sw	Screw	432-31470	
155	Zugentlastung schwarz	Cable Binding	530-83106.102	
156	Lochblech ARTICOS 55	Cover	778-88934.001	
159	Abdeckung Lüfter schwarz ARTICOS 55	Mask	703-89058.002	
256	Halteblech schwarz für Spiegel klein	Holder	602-88642.002	
257	Spiegel klein ARTICOS 55	Window	666-88648.001	
258	Halter für Spiegelverstellung ARTICOS 55	Holder	602-88922.001	
301	Abdeckblech schwarz Bedienung ARTICOS 55	Cover	568-88635.102	
305	Abdeckung Bedienteil ARTICOS 55 US	Mask	703-88976.001	
306	Abdeckung Bedienteil ARTICOS 55 US	Mask	703-88964.001	
731	Abdeckblech Rearboard schwarz US	Cover	568-88866.702	
735	Abdeckung schwarz	Ornamental Molding	701-87603.002	
G100	Holzgehäuse innen schwarz ARTICOS 55	Cabinet	750-88643.002	
G102	Frontscheibe basalt matt ARTICOS 55 US	Window	666-88639.705	
G110	Rückwand basalt-matt ARTICOS 55	Backcover	775-88646.005	C20
G110	Rückwand platin ARTICOS 55	Backcover	775-88646.009	A20
G110	Rückwand basalt-hgl. ARTICOS 55	Backcover	775-88646.015	M20
G112	Abdeckung Rückw. basalt-matt ARTICOS 55	Mask	703-88645.005	C20
G112	Abdeckung Rückwand platin ARTICOS 55	Mask	703-88645.009	A20
G112	Abdeckung Rückw. basalt-hgl. ARTICOS 55	Mask	703-88645.015	M20
G350	Ziergitter platin ARTICOS 55	Speaker Grille	708-88638.009	A20
G350	Ziergitter basalt-hgl. ARTICOS 55	Speaker Grille	708-88638.015	C20
G350	Ziergitter basalt-hgl. ARTICOS 55	Speaker Grille	708-88638.015	M20
	SPULEN/LAUTSPRECHER	**COILS,SPEAKERS**		
190	Lüfter F8025S12B ohne Kont.	Motor	269-27521	
192	DC-Lüfter 80x80x25 inkl. Kabel vorm.	Motor	269-31814.050	
193	DC-Lüfter 92x92x25 inkl. Kabel vorm.	Motor	269-31822.050	
L101	Ferritkern geschlossen	Ferrite Bead	522-28128	
L102	Klappferrit rund 10mm schwarz	Ferrite Bead	522-31628	
L103	Ferritkern Ring R26x14,5x5,5 FE323	Ferrite Bead	522-29824	
	ALLGEM. MECHAN. TEILE	**COMMON MECHANICAL PARTS**		
H1510	Bolzen UNC HFS-4S-B1WM FA. JST	Bolt	579-28072	

Basic Board RPTV 88633.050

Pos.Nr. Item N°.	Bestell-Bezeichnung	Description List Part N°.	Bestell-Nr.	Var. Var.
	SPULEN/LAUTSPRECHER	**COILS,SPEAKERS**		
L101	Relay 5V 75R 10A 1-pol.	Relay	387-29278	050
T101	Trafo Standby	Power Transformer	490-30875	050
T336	Dr. PFC 269uH	Choke	298-31564	050
T531	Trafo SMT E42/15S	Power Transformer	490-31563	050
	ALLGEM. MECHAN. TEILE	**COMMON MECHANICAL PARTS**		
H511	Sicherungshalter für SI 5x20	Fuseholder Spring	730-20061	050
H512	Sicherungshalter für SI 5x20	Fuseholder Spring	730-20061	050
	INTEGR. SCHALTUNGEN	**INTEGRATED CIRCUITS**		
I123	IC-VR 2V5-24V	Integrated Circuit	350-31490	050
I131	VIPER12# SO8 CHARGE	Integrated Circuit	350-29281	050
I306	MC33262 SO-8 ONSEMI	Integrated Circuit	350-31489	050
I551	ICMOS TDA16846 P-DSO-14-3	Integrated Circuit	350-30893	050
I611	IC-VR 2V5-24V	Integrated Circuit	350-31490	050
I636	IC-VR 12V00 J 1A5	Integrated Circuit	349-31637	050
I663	L 78S09CV geschnitten	Integrated Circuit	349-24013.Y18	050
I673	L 7808ACV TO220 vormontiert	Integrated Circuit	349-21780.Y18	050
I721	ICMOS LTC1778 SSOP16	Integrated Circuit	350-30891	050
I751	ICMOS ST755 SO8	Integrated Circuit	350-31267	050
I761	ICMOS M34063A SO008	Integrated Circuit	350-28429	050
	BUCHSEN/FASSUNGEN	**SOCKETS**		
W691	Buchsenl. 16-pol. 2-reihig gerade	Contact Ledge	326-31043	050
	TRANSISTOREN	**TRANSISTORS**		
10	20A 500V TO220FP POWMOS-NCH	Transistor	346-31643	050
10	POWMOS TO220FP NCH 800V 9A	Transistor	346-31651	050
Q338	20A 500V TO220FP POWMOS-NCH	Transistor	346-31643.Y27	050
Q536	POWMOS TO220FP NCH 800V 9A	Transistor	346-31651.Y27	050
	DIODEN	**DIODES**		
10	3A0 1000V DO27A UFAST-GP	Diode	352-22712	050
10	STTA506F TO220	Diode	352-27866	050
10	10A0 200V ISOWATT220AC	Diode	352-28625	050
10	3A0 300V DO201AD UFAST-GP	Diode	352-29726	050
10	2x10A 100V TO220FBAB STPS20	Diode	352-31559	050
D133	Gleichrichter DF 08 S	Rectifier	354-25837	050
D342	STTA506F TO220	Diode	352-27866.Y18	050
D411	10A0 200V	Diode	352-28625.Y18	050
D416	10A0 200V	Diode	352-28625.Y18	050
D518	Gleichrichter FBI5L1M1 900V/5A	Rectifier	354-27910.Y34	050
D541	3A0 1000V DO27A UFAST-GP	Diode	352-22712.Y26	050
D621	10A0 200V	Diode	352-28625.Y18	050
D626	3A0 300V DO201AD UFAST-GP	Diode	352-29726.Y26	050
D651	2x10A 100V TO220FBAB STPS20	Diode	352-31559.Y28	050
I122	Opto-Koppler DIP4 80V 50/80mA	Coupler	353-28638	050
I606	Opto-Koppler DIP4 80V 50/80mA	Coupler	353-28638	050
	SICHERUNGEN	**FUSES**		
F133	2500mA F 250V 8x8	Fuse	380-30815.020	050
F411	3150mA F 250V 8x8	Fuse	380-26219.020	050
F416	3150mA F 250V 8x8	Fuse	380-26219.020	050
F511	3150mA T 250V 5x20	Fuse	380-29649	050
F621	4000mA F 250V 8x8	Fuse	380-31271.020	050
F626	3150mA F 250V 8x8	Fuse	380-26219.020	050
F631	3150mA F 250V 8x8	Fuse	380-26219.020	050

Basic Board RPTV 88633.050

Pos.Nr. Item N°.	Bestell-Bezeichnung	Description List Part N°.	Bestell-Nr.	Var. Var.
	SICHERUNGEN	**FUSES**		
F650	4000mA F 250V 8x8	Fuse	380-31271.020	050
F651	4000mA F 250V 8x8	Fuse	380-31271.020	050
F661	1000mA F 250V 8x8	Fuse	380-31664.020	050
	KONDENSATOREN	**CAPACITORS**		
C100	330P M 400VW	Capacitor	357-73804.Y01	050
C133	Elko 33U M 400V	Electrolytic Capacitor	360-30816	050
C339	390P J 2000V	Capacitor	359-28868	050
C343	390P J 2000V	Capacitor	359-28868	050
C411	1N K 1000V	Capacitor	357-21980.020	050
C416	1N K 1000V	Capacitor	357-21980.020	050
C501	330P M 400VW	Capacitor	357-73804.Y01	050
C511	470N M 310VW	Capacitor	359-29681	050
C512	470N M 310VW	Capacitor	359-29681	050
C514	470N M 310VW	Capacitor	359-29681	050
C516	470N M 310VW	Capacitor	359-29681	050
C517	470N M 310VW	Capacitor	359-29681	050
C518	470N M 275VW	Capacitor	359-28292	050
C526	Elko 330U M 450V	Electrolytic Capacitor	360-27891	050
C533	390P J 2000V	Capacitor	359-28868	050
C541	22N J 630V	Capacitor	359-26531	050
C582	1N K 1000V	Capacitor	357-21980.020	050
C600	KO-Y1 1N5 M	Capacitor	357-29161	050
C621	470P K 1000V	Capacitor	357-23994.020	050
C626	470P K 1000V	Capacitor	357-23994.020	050
C631	1N K 1000V	Capacitor	357-21980.020	050
	WIDERSTÄNDE	**RESISTORS**		
10	820K J 2W 0309 PR02	Resistor	367-31407	050
10	0R15 J 0411	Resistor	368-27865	050
R133	2R2 K 4W0 24x05	Resistor	368-31279	050
R301	0R15 5% 0411	Resistor	368-27865.Y03	050
R302	0R15 5% 0411	Resistor	368-27865.Y03	050
R517	820K J 2W 0309 PR02	Resistor	367-31407.Y03	050
R518	Varistor 750V S	VDR Resistor	371-31296	050
R519	WIDNTC 2R5 M 7R5 Y-Type	NTC Resistor	370-31354	050
R541	39K J 3W	Resistor	367-22403	050
R600	10M J 0411	Resistor	367-19664	050
	SMD TEILE	**SMD PARTS**		
D106	1,0A 600V	Diode	351-20547	050
D121	1,0A 200V DO214AC FAST-GP	Diode	351-25539	050
D131	0A25 250V SOD-80 CLL 2003	Diode	351-29925	050
D132	DIOZD 62V0 J 1W5 SMA CM5944B	Diode	351-31460	050
D304	0A5 20V SOD123 Schottky	Diode	351-30905	050
D324	BAS316 SOD323	Diode	351-27952	050
D536	BAS316 SOD323	Diode	351-27952	050
D582	1,0A 200V DO214AC FAST-GP	Diode	351-29831	050
D631	5A0*2 150V D2PAK Schottky	Diode	351-31630	050
D641	DIOZD 5V6 J 0W25 SOD323	Diode	351-31054	050
D642	BAS321 SOD323	Diode	351-28873	050
D648	1,0A 200V DO214AC FAST-GP	Diode	351-25539	050
D649	1,0A 200V DO214AC FAST-GP	Diode	351-25539	050
D713	0A5 20V SOD123 Schottky	Diode	351-30905	050

Basic Board RPTV 88633.050

Pos.Nr. Item N°.	Bestell-Bezeichnung	Description List Part N°.	Bestell-Nr.	Var. Var.
	SMD TEILE	**SMD PARTS**		
D739	0A5 20V SOD123 Schottky	Diode	351-30905	050
D742	3,0A 40V SOD6 Schottky	Diode	351-28529	050
D753	3,0A 40V SOD6 Schottky	Diode	351-28529	050
D763	3,0A 40V SOD6 Schottky	Diode	351-28529	050
Q111	BC847BW SOT323	Transistor	344-27272	050
Q116	BC857BW SOT323	Transistor	344-28404	050
Q741	FDS8936A SO8 6A 30V DUAL-N-CH	Transistor	344-30892	050

Signal Board 88557.055

Pos.Nr. Item N°.	Bestell-Bezeichnung	Description List Part N°.	Bestell-Nr.	Var. Var.
	BAUGRUPPEN	**UNITS**		
15	DIS-Modul kpl. S-Box RA/SA2550	P.C.B	396-88804.050	055
U2502	Tuner-ZF M Multisystem MN/BG-DK	Tuner	260-87271.051	055
U2503	Tuner-ZF MPAS Multisyst. mit Ant.-Splitter	Tuner	260-87345.060	055
	VERBINDUNGSLEITUNG	**CONNECTING CABLES**		
50	Antennenkabel 240mm mit Winkelstecker	Connecting Cable	169-27470.001	055
	INTEGR. SCHALTUNGEN	**INTEGRATED CIRCUITS**		
10	Tuner-ZF MPAS kpl.	P.C.B	396-87222.060	055
I2051	ICMOS MSP3411 PQFP-80 SOUND	Integrated Circuit	350-29132	055
I2056	MC 78L08ACP TO92	Integrated Circuit	349-24725.020	055
I2091	MC33079 SO14	Integrated Circuit	350-28701	055
I2092	TEA6422D SO28	Integrated Circuit	350-25732	055
I2151	ICMOS VPC3233D-C5 MQFP80	Integrated Circuit	350-30823	055
I2161	ICMOS SAA4955HL LQFP44	Integrated Circuit	350-28823	055
I2171	ICMOS SAA4955HL LQFP44	Integrated Circuit	350-28823	055
I2192	ICMOS 74LVC08 SO14 AND	Integrated Circuit	350-27928	055
I2193	ICMOS 74LVC00A D SO14	Integrated Circuit	350-28990	055
I2271	ICMOS VPC3230D-C5 MQFP80	Integrated Circuit	350-30821	055
I2301	ICMOS 74LVC00A D SO14	Integrated Circuit	350-28990	055
I2302	ICMOS LM1881 SO-8 SYNC SLICER	Integrated Circuit	350-31067	055
I2311	ICMOS SAA4979/108 QFP128 BESIC	Integrated Circuit	350-31405	055
I2318	IC-VR 3V30 0A30 SOT223	Integrated Circuit	350-29462	055
I2411	IC-VR 1V8 0A8 DDPAK	Integrated Circuit	350-31046	055
I2418	ICMOS 74 AC157 SO16	Integrated Circuit	350-28896	055
I2421	ICMOS SAA4998 QFP100 FALCONIC EM	Integrated Circuit	350-31064	055
I2453	ICMOS 74AHCT1G32 SOT353 ODER	Integrated Circuit	350-30907	055
I2531	ICMOS HEF4053D SO16	Integrated Circuit	350-24881	055
I2560	ICMOS PCF8574 SSOP20	Integrated Circuit	350-28688	055
I2601	ICMOS DDP3315C 5V 3V3 PQFP-80	Integrated Circuit	350-30966	055
I2602	IC-VR LF50CDT DPAK 5,0V	Integrated Circuit	350-29887	055
I2665	LT1675CGN SSOP16 RGB-MUX	Integrated Circuit	350-30906	055
I2701	LT1675CGN SSOP16 RGB-MUX	Integrated Circuit	350-30906	055
I2716	ICMOS 74HCT4052D SO16	Integrated Circuit	350-29463	055
I2786	IC-VR 3V30 0A30 SOT223	Integrated Circuit	350-29462	055
I2796	IC-VR 2V50 0A30 SOT223	Integrated Circuit	350-29460	055
I2801	ICMOS SDA6000 MQFP128 TELTEX	Integrated Circuit	350-29127	055
I2841	SN74LS92D SO14 TTL	Integrated Circuit	350-28484	055
I2842	ICMOS 74HCT 00 SO14	Integrated Circuit	350-15555	055
I2916	ICMOS 48LC4M# TSOP2 10ns SDRAM	Integrated Circuit	350-29137	055
I2921	ICMOS 29LV320D TSOP48 90ns FLASH	Integrated Circuit	350-29860	055

Signal Board 88557.055

Pos.Nr. Item N°.	Bestell-Bezeichnung	Description List Part N°.	Bestell-Nr.	Var. Var.
	INTEGR. SCHALTUNGEN	**INTEGRATED CIRCUITS**		
I2931	ICMOS M24C64 SO8 EEPROM	Integrated Circuit	350-29894	055
I2941	ICRES 2V7 SOT23-5	Integrated Circuit	350-30904	055
I2946	ICRES 2V7 SOT23-5	Integrated Circuit	350-30904	055
I4500	TDA5637 SOT340	Integrated Circuit	350-27278	055
I4600	TSA5523M SOT266	Integrated Circuit	350-27275	055
I4800	TDA9818 TS-SSOP24	Integrated Circuit	350-28463	055
	BUCHSEN/FASSUNGEN	**SOCKETS**		
11	Kurzschluß-Stecker	Plug	321-16821	055
H2936	IC-Fassung 8-pol.	Socket	320-80503	055
W2019	Kopfhörerbuchse 3,5mm horiz.	Socket	323-24591	055
W2473	EL-Connector 9-pol.	Socket	323-28380	055
W2691	Buchsenl. 16-pol. 2-reihig gerade	Contact Ledge	326-31043	055
	BUCHSEN/FASSUNGEN	**SOCKETS**		
W2841	Kopfhörerbuchse 2,5mm	Socket	323-27389	055
W2842	Kopfhörerbuchse 3,5mm horiz.	Socket	323-24591	055
W2902	Connector 13-pol. 13JL-BT-L-H-C (JST)	Contact Ledge	326-19543	055
W2903	Connector 13-pol. 13JL-BT-L-H-C (JST)	Contact Ledge	326-19543	055
W2904	Connector 13-pol. 13JL-BT-L-H-C (JST)	Contact Ledge	326-19543	055
W2969	Mini-DIN-Buchse 8-pol.	Socket	323-18812	055
	TRANSISTOREN	**TRANSISTORS**		
Q2027	BC857BW SOT323	Transistor	344-28404	055
Q2076	BC857BW SOT323	Transistor	344-28404	055
Q2078	BC857BW SOT323	Transistor	344-28404	055
Q2226	BC857BW SOT323	Transistor	344-28404	055
Q2371	BC847BW SOT323	Transistor	344-27272	055
Q2721	BC847BW SOT323	Transistor	344-27272	055
Q2726	BC847BW SOT323	Transistor	344-27272	055
Q2731	BC847BW SOT323	Transistor	344-27272	055
Q2755	BC847BW SOT323	Transistor	344-27272	055
Q2758	BC847BW SOT323	Transistor	344-27272	055
Q2762	BC847BW SOT323	Transistor	344-27272	055
Q2765	BC847BW SOT323	Transistor	344-27272	055
Q2823	BC847BW SOT323	Transistor	344-27272	055
Q2831	BC847BW SOT323	Transistor	344-27272	055
Q2853	BC847BW SOT323	Transistor	344-27272	055
Q2886	SN7002 SOT23 0A19 60V NCH	Transistor	344-29134	055
Q2891	SN7002 SOT23 0A19 60V NCH	Transistor	344-29134	055
Q2893	SN7002 SOT23 0A19 60V NCH	Transistor	344-29134	055
Q2902	BC847BW SOT323	Transistor	344-27272	055
Q2957	BC847BW SOT323	Transistor	344-27272	055
	DIODEN	**DIODES**		
D4203	DIOVC 0A02 30V SOD323 BB640	Diode	351-26568	055
D4204	DIOVC 0A02 30V SOD323 BB535	Diode	351-26570	055
D4222	DIOVC 0A02 30V SOD323 BB640	Diode	351-26568	055
D4241	DIOVC 0A02 30V SOD323 BB640	Diode	351-26568	055
D4242	DIOVC 0A02 30V SOD323 BB535	Diode	351-26570	055
D4303	DIOVC 0A02 30V SOD323 BB639	Diode	351-26571	055
D4304	DIOVC 0A02 30V SOD323 BB535	Diode	351-26570	055
D4322	DIOVC 0A02 30V SOD323 BB639	Diode	351-26571	055
D4341	DIOVC 0A02 30V SOD323 BB639	Diode	351-26571	055
D4403	DIOVC 0A02 30V SOD323 BB535	Diode	351-26570	055
D4422	DIOVC 0A02 30V SOD323 BB535	Diode	351-26570	055
D4441	DIOVC 0A02 30V SOD323 BB535	Diode	351-26570	055
D4508	DIOVC 0A02 30V SOD323 BB640	Diode	351-26568	055

Signal Board 88557.055

Pos.Nr. Item N°.	Bestell-Bezeichnung	Description List Part N°.	Bestell-Nr.	Var. Var.
	DIODEN	**DIODES**		
D4527	DIOVC 0A02 30V SOD323 BB639	Diode	351-26571	055
D4551	DIOVC 0A02 30V SOD323 BB535	Diode	351-26570	055
D4806	BAV 99W SOT323	Diode	351-27469	055
	QUARZE/FILTER	**QUARTZES**		
X2048	18,432000 MHz HC49U	Crystal Oscillator	385-25502	055
X2181	20,250000 MHz HC49U4H	Crystal Oscillator	385-30937	055
X2283	20,250000 MHz HC49U4H	Crystal Oscillator	385-30937	055
X2336	12,000000 MHz HC49U CL=12pF	Crystal Oscillator	385-29247	055
X2642	5,000000 MHz HC49U	Crystal Oscillator	385-30969	055
X2841	Piezo Filter 429,0 KHz	Ceramic Filter	386-18622	055
X2876	6,000000 MHz HC49U CL=20pF	Crystal Oscillator	385-29248	055
	WIDERSTÄNDE	**RESISTORS**		
R2987	10R J 0207 0,25W WIDSI	Resistor	366-20353	055
	SMD TEILE	**SMD PARTS**		
D2002	BAS316 SOD323	Diode	351-27952	055
D2003	BAS316 SOD323	Diode	351-27952	055
D2020	BAS316 SOD323	Diode	351-27952	055
D2033	DIOZD 5V6 J 0W25 SOD323	Diode	351-31054	055
D2293	0A5 20V SOD123 Schottky	Diode	351-30905	055
D2501	DIOZD 30V J 0W25 SOD323	Diode	351-31055	055
D2502	DIOZD 5V6 J 0W25 SOD323	Diode	351-31054	055
D2503	DIOZD 5V6 J 0W25 SOD323	Diode	351-31054	055
D2508	DIOZD 5V6 J 0W25 SOD323	Diode	351-31054	055
D2556	BAS316 SOD323	Diode	351-27952	055
D2559	0A5 20V SOD123 Schottky	Diode	351-30905	055
D2602	DIOZD 5V6 J 0W25 SOD323	Diode	351-31054	055
D2666	DIOZD 5V6 J 0W25 SOD323	Diode	351-31054	055
D2671	0A5 20V SOD123 Schottky	Diode	351-30905	055
D2681	BAS316 SOD323	Diode	351-27952	055
D2682	BAS316 SOD323	Diode	351-27952	055
D2683	BAS316 SOD323	Diode	351-27952	055
D2701	DIOZD 5V6 J 0W25 SOD323	Diode	351-31054	055
D2702	0A5 20V SOD123 Schottky	Diode	351-30905	055
D2703	DIOZD 5V6 J 0W25 SOD323	Diode	351-31054	055
D2734	0A5 20V SOD123 Schottky	Diode	351-30905	055
D2735	BAS316 SOD323	Diode	351-27952	055
D2736	0A5 20V SOD123 Schottky	Diode	351-30905	055
D2788	DIOZD 5V6 J 0W25 SOD323	Diode	351-31054	055
D2789	DIOZD 5V6 J 0W25 SOD323	Diode	351-31054	055
D2815	DIOZD 5V6 J 0W25 SOD323	Diode	351-31054	055
D2818	DIOZD 5V6 J 0W25 SOD323	Diode	351-31054	055
D2843	BAS316 SOD323	Diode	351-27952	055
D2848	0A5 20V SOD123 Schottky	Diode	351-30905	055
D2849	0A5 20V SOD123 Schottky	Diode	351-30905	055
D2850	0A5 20V SOD123 Schottky	Diode	351-30905	055
D2856	BAS316 SOD323	Diode	351-27952	055
D2857	0A5 20V SOD123 Schottky	Diode	351-30905	055
D2860	0A5 20V SOD123 Schottky	Diode	351-30905	055
D2863	BAS316 SOD323	Diode	351-27952	055
D2882	DIOZD 5V6 J 0W25 SOD323	Diode	351-31054	055
D2883	DIOZD 6V2 J 0W25 SOD323	Diode	351-31062	055
D2884	DIOZD 6V2 J 0W25 SOD323	Diode	351-31062	055
D2885	DIOZD 5V6 J 0W25 SOD323	Diode	351-31054	055
D2887	DIOZD 6V2 J 0W25 SOD323	Diode	351-31062	055

Signal Board 88557.055

Pos.Nr. Item N°.	Bestell-Bezeichnung	Description List Part N°.	Bestell-Nr.	Var. Var.
	SMD TEILE	**SMD PARTS**		
D2889	DIOZD 6V2 J 0W25 SOD323	Diode	351-31062	055
D2930	DIOZD 5V6 J 0W25 SOD323	Diode	351-31054	055
D2964	BAS316 SOD323	Diode	351-27952	055
D2967	BAS316 SOD323	Diode	351-27952	055
D2982	BAS316 SOD323	Diode	351-27952	055
D2984	BAS316 SOD323	Diode	351-27952	055
D2986	DIOZD 5V6 J 0W25 SOD323	Diode	351-31054	055
D2987	BAS316 SOD323	Diode	351-27952	055
D2988	BAS316 SOD323	Diode	351-27952	055
D2989	BAS316 SOD323	Diode	351-27952	055
D4702	BA 592 SOD323	Diode	351-25810	055
D4703	BA 592 SOD323	Diode	351-25810	055
D4751	BA 592 SOD323	Diode	351-25810	055
D4752	BA 592 SOD323	Diode	351-25810	055
D4771	BA 592 SOD323	Diode	351-25810	055
D4772	BA 592 SOD323	Diode	351-25810	055
D4781	BA 592 SOD323	Diode	351-25810	055
D4832	BA 592 SOD323	Diode	351-25810	055
Q2001	BC847BW SOT323	Transistor	344-27272	055
Q2002	BC807-25 SOT23	Transistor	344-16064	055
Q2003	BC857BW SOT323	Transistor	344-28404	055
Q2004	BC857BW SOT323	Transistor	344-28404	055
Q2005	BC847BW SOT323	Transistor	344-27272	055
Q2006	BC857BW SOT323	Transistor	344-28404	055
Q2066	BC857BW SOT323	Transistor	344-28404	055
Q2103	BCW66H	Transistor	344-26051	055
Q2114	BC847BW SOT323	Transistor	344-27272	055
Q2117	BC847BW SOT323	Transistor	344-27272	055
Q2122	BC857BW SOT323	Transistor	344-28404	055
Q2123	BC857BW SOT323	Transistor	344-28404	055
Q2128	BC847BW SOT323	Transistor	344-27272	055
Q2129	BC847BW SOT323	Transistor	344-27272	055
Q2130	BC857BW SOT323	Transistor	344-28404	055
Q2131	BC847BW SOT323	Transistor	344-27272	055
Q2132	BC857BW SOT323	Transistor	344-28404	055
Q2133	BC847BW SOT323	Transistor	344-27272	055
Q2148	BC847BW SOT323	Transistor	344-27272	055
Q2149	BC847BW SOT323	Transistor	344-27272	055
Q2150	BC847BW SOT323	Transistor	344-27272	055
Q2181	BC847BW SOT323	Transistor	344-27272	055
Q2182	BC857BW SOT323	Transistor	344-28404	055
Q2191	BC847BW SOT323	Transistor	344-27272	055
Q2192	BC847BW SOT323	Transistor	344-27272	055
Q2193	BC847BW SOT323	Transistor	344-27272	055
Q2340	BC847BW SOT323	Transistor	344-27272	055
Q2387	BC847BW SOT323	Transistor	344-27272	055
Q2388	BC847BW SOT323	Transistor	344-27272	055
Q2389	BC857BW SOT323	Transistor	344-28404	055
Q2478	BC857BW SOT323	Transistor	344-28404	055
Q2537	BC847BW SOT323	Transistor	344-27272	055
Q2541	BC847BW SOT323	Transistor	344-27272	055
Q2546	BC857BW SOT323	Transistor	344-28404	055
Q2551	BC847BW SOT323	Transistor	344-27272	055
Q2556	BC857BW SOT323	Transistor	344-28404	055

Signal Board 88557.055

Pos.Nr. Item N°.	Bestell-Bezeichnung	Description List Part N°.	Bestell-Nr.	Var. Var.
	SMD TEILE	**SMD PARTS**		
Q2566	BC857BW SOT323	Transistor	344-28404	055
Q2571	BC847BW SOT323	Transistor	344-27272	055
Q2630	BC857BW SOT323	Transistor	344-28404	055
Q2631	BC847BW SOT323	Transistor	344-27272	055
Q2641	BC857BW SOT323	Transistor	344-28404	055
Q2642	BC847BW SOT323	Transistor	344-27272	055
Q2651	BC857BW SOT323	Transistor	344-28404	055
Q2652	BC847BW SOT323	Transistor	344-27272	055
Q2683	BC847BW SOT323	Transistor	344-27272	055
Q2701	BC847BW SOT323	Transistor	344-27272	055
Q2736	BC847BW SOT323	Transistor	344-27272	055
Q2741	BC847BW SOT323	Transistor	344-27272	055
Q2746	BC847BW SOT323	Transistor	344-27272	055
Q2752	BC847BW SOT323	Transistor	344-27272	055
Q2768	BC847BW SOT323	Transistor	344-27272	055
Q2772	BC847BW SOT323	Transistor	344-27272	055
Q2775	BC847BW SOT323	Transistor	344-27272	055
Q2778	BC847BW SOT323	Transistor	344-27272	055
Q2791	SN7002 SOT23 0A19 60V NCH	Transistor	344-29134	055
Q2793	SN7002 SOT23 0A19 60V NCH	Transistor	344-29134	055
Q2841	BC807-25 SOT23	Transistor	344-16064	055
Q2862	BC847BW SOT323	Transistor	344-27272	055
Q2883	SN7002 SOT23 0A19 60V NCH	Transistor	344-29134	055
Q2888	SN7002 SOT23 0A19 60V NCH	Transistor	344-29134	055
Q2943	BC847BW SOT323	Transistor	344-27272	055
Q2954	BC857BW SOT323	Transistor	344-28404	055
Q2971	SN7002 SOT23 0A19 60V NCH	Transistor	344-29134	055
Q2972	BC857BW SOT323	Transistor	344-28404	055
Q2973	BSV52 SOT23	Transistor	344-16207	055
Q2974	BC807-25 SOT23	Transistor	344-16064	055
Q2976	BC857BW SOT323	Transistor	344-28404	055
Q4127	BFR93AW SOT323	Transistor	344-29926	055
Q4137	BFR93AW SOT323	Transistor	344-29926	055
Q4147	BFR93AW SOT323	Transistor	344-29926	055
Q4210	BF1009SW SOT323	Transistor	344-28301	055
Q4310	BF1009SW SOT323	Transistor	344-28301	055
Q4410	BF1009SW SOT323	Transistor	344-28301	055
Q4702	Digital SOT323 NPN 50V 70MA 47K+	Transistor	344-27270	055
Q4709	Digital SOT323 NPN 50V 70MA 47K+	Transistor	344-27270	055
Q4752	Digital SOT323 NPN 50V 100MA 47K	Transistor	344-28555	055
Q4754	Digital SOT323 NPN 50V 70MA 47K+	Transistor	344-27270	055
Q4772	Digital SOT323 NPN 50V 100MA 47K	Transistor	344-28555	055
Q4774	Digital SOT323 NPN 50V 70MA 47K+	Transistor	344-27270	055
Q4804	BC857BW SOT323	Transistor	344-28404	055
Q4832	BCR198W SOT323 PNP	Transistor	344-27269	055
Q4833	BC847BW SOT323	Transistor	344-27272	055
R2441	Wid.-Array 10Rx4 1608x4	Resistor	374-29922	055
R2442	Wid.-Array 10Rx4 1608x4	Resistor	374-29922	055

Signal Board 88557.065

Pos.Nr. Item N°.	Bestell-Bezeichnung	Description List Part N°.	Bestell-Nr.	Var. Var.
	BAUGRUPPEN	**UNITS**		
15	DIS-Modul kpl. S-Box RA/SA2550	P.C.B	396-88804.050	065
U2502	574 Tuner-ZF US	Tuner	260-87346.050	065
U2503	Tuner-ZF USP99	Tuner	260-87507.051	065
	VERBINDUNGSLEITUNG	**CONNECTING CABLES**		
50	Antennenkabel 240mm mit Winkelstecker	Connecting Cable	169-27470.001	065
	INTEGR. SCHALTUNGEN	**INTEGRATED CIRCUITS**		
I2051	ICMOS MSP3440G PQFP-80 SOUND	Integrated Circuit	350-31284	065
I2056	MC 78L08ACP TO92	Integrated Circuit	349-24725.020	065
I2091	MC33079 SO14	Integrated Circuit	350-28701	065
I2092	TEA6422D SO28	Integrated Circuit	350-25732	065
I2120	ICMOS Z 86130 SOIC18	Integrated Circuit	350-28372	065
I2151	ICMOS VPC3230D-C5 MQFP80	Integrated Circuit	350-30821	065
I2161	ICMOS SAA4955HL LQFP44	Integrated Circuit	350-28823	065
I2171	ICMOS SAA4955HL LQFP44	Integrated Circuit	350-28823	065
I2192	ICMOS 74LVC08 SO14 AND	Integrated Circuit	350-27928	065
I2193	ICMOS 74LVC00A D SO14	Integrated Circuit	350-28990	065
I2271	ICMOS VPC3230D-C5 MQFP80	Integrated Circuit	350-30821	065
I2301	ICMOS 74LVC00A D SO14	Integrated Circuit	350-28990	065
I2302	ICMOS LM1881 SO-8 SYNC SLICER	Integrated Circuit	350-31067	065
I2311	ICMOS SAA4979/108 QFP128 BESIC	Integrated Circuit	350-31405	065
I2318	IC-VR 3V30 0A30 SOT223	Integrated Circuit	350-29462	065
I2411	IC-VR 1V8 0A8 DDPAK	Integrated Circuit	350-31046	065
I2418	ICMOS 74 AC157 SO16	Integrated Circuit	350-28896	065
I2421	ICMOS SAA4998 QFP100 FALCONIC EM	Integrated Circuit	350-31064	065
I2453	ICMOS 74AHCT1G32 SOT353 ODER	Integrated Circuit	350-30907	065
I2531	ICMOS HEF4053D SO16	Integrated Circuit	350-24881	065
I2560	ICMOS PCF8574 SSOP20	Integrated Circuit	350-28688	065
I2601	ICMOS DDP3315C 5V 3V3 PQFP-80	Integrated Circuit	350-30966	065
I2602	IC-VR LF50CDT DPAK 5,0V	Integrated Circuit	350-29887	065
I2665	LT1675CGN SSOP16 RGB-MUX	Integrated Circuit	350-30906	065
I2701	LT1675CGN SSOP16 RGB-MUX	Integrated Circuit	350-30906	065
I2786	IC-VR 3V30 0A30 SOT223	Integrated Circuit	350-29462	065
I2796	IC-VR 2V50 0A30 SOT223	Integrated Circuit	350-29460	065
I2801	ICMOS SDA6000 MQFP128 TELTEX	Integrated Circuit	350-29127	065
I2841	SN74LS92D SO14 TTL	Integrated Circuit	350-28484	065
I2842	ICMOS 74HCT 00 SO14	Integrated Circuit	350-15555	065
I2916	ICMOS 48LC4M# TSOP2 10ns SDRAM	Integrated Circuit	350-29137	065
I2921	ICMOS 29LV320D TSOP48 90ns FLASH	Integrated Circuit	350-29860	065
I2931	ICMOS M24C64 SO8 EEPROM	Integrated Circuit	350-29894	065
I2941	ICRES 2V7 SOT23-5	Integrated Circuit	350-30904	065
I2946	ICRES 2V7 SOT23-5	Integrated Circuit	350-30904	065
I4500	TDA5637 SOT340	Integrated Circuit	350-27278	065
I4600	TSA5523M SOT266	Integrated Circuit	350-27275	065
I4800	TDA9817 TS-SSOP24	Integrated Circuit	350-28929	065
	BUCHSEN/FASSUNGEN	**SOCKETS**		
11	Kurzschluß-Stecker	Plug	321-16821	065
H2936	IC-Fassung 8-pol.	Socket	320-80503	065
W2019	Kopfhörerbuchse 3,5mm horiz.	Socket	323-24591	065
W2473	EL-Connector 9-pol.	Socket	323-28380	065
W2691	Buchsenleiste 16-pol. 2-reihig gerade	Contact Ledge	326-31043	065
W2842	Kopfhörerbuchse 3,5mm horiz.	Socket	323-24591	065

Signal Board 88557.065

Pos.Nr. Item N°.	Bestell-Bezeichnung	Description List Part N°.	Bestell-Nr.	Var. Var.
	BUCHSEN/FASSUNGEN	**SOCKETS**		
W2902	Connector 13-pol. 13JL-BT-L-H-C (JST)	Contact Ledge	326-19543	065
W2903	Connector 13-pol. 13JL-BT-L-H-C (JST)	Contact Ledge	326-19543	065
W2904	Connector 13-pol. 13JL-BT-L-H-C (JST)	Contact Ledge	326-19543	065
W2969	Mini-DIN-Buchse 8-pol.	Socket	323-18812	065
	TRANSISTOREN	**TRANSISTORS**		
Q2027	BC857BW SOT323	Transistor	344-28404	065
Q2076	BC857BW SOT323	Transistor	344-28404	065
Q2078	BC857BW SOT323	Transistor	344-28404	065
Q2371	BC847BW SOT323	Transistor	344-27272	065
Q2726	BC847BW SOT323	Transistor	344-27272	065
Q2762	BC847BW SOT323	Transistor	344-27272	065
Q2823	BC847BW SOT323	Transistor	344-27272	065
Q2831	BC847BW SOT323	Transistor	344-27272	065
Q2853	BC847BW SOT323	Transistor	344-27272	065
Q2886	SN7002 SOT23 0A19 60V NCH	Transistor	344-29134	065
Q2891	SN7002 SOT23 0A19 60V NCH	Transistor	344-29134	065
Q2893	SN7002 SOT23 0A19 60V NCH	Transistor	344-29134	065
Q2902	BC847BW SOT323	Transistor	344-27272	065
Q2957	BC847BW SOT323	Transistor	344-27272	065
	DIODEN	**DIODES**		
D4203	DIOVC 0A02 30V SOD323 BB640	Diode	351-26568	065
D4204	DIOVC 0A02 30V SOD323 BB535	Diode	351-26570	065
D4222	DIOVC 0A02 30V SOD323 BB640	Diode	351-26568	065
D4241	DIOVC 0A02 30V SOD323 BB640	Diode	351-26568	065
D4242	DIOVC 0A02 30V SOD323 BB535	Diode	351-26570	065
D4303	DIOVC 0A02 30V SOD323 BB639	Diode	351-26571	065
D4304	DIOVC 0A02 30V SOD323 BB535	Diode	351-26570	065
D4322	DIOVC 0A02 30V SOD323 BB639	Diode	351-26571	065
D4341	DIOVC 0A02 30V SOD323 BB639	Diode	351-26571	065
D4403	DIOVC 0A02 30V SOD323 BB535	Diode	351-26570	065
D4422	DIOVC 0A02 30V SOD323 BB535	Diode	351-26570	065
D4441	DIOVC 0A02 30V SOD323 BB535	Diode	351-26570	065
D4508	DIOVC 0A02 30V SOD323 BB640	Diode	351-26568	065
D4527	DIOVC 0A02 30V SOD323 BB639	Diode	351-26571	065
D4551	DIOVC 0A02 30V SOD323 BB535	Diode	351-26570	065
D4806	BAV 99W SOT323	Diode	351-27469	065
	QUARZE/FILTER	**QUARTZES**		
X2048	18,432000 MHz HC49U	Crystal Oscillator	385-25502	065
X2120	32,768000 KHz	Crystal Oscillator	385-24962	065
X2181	20,250000 MHz HC49U4H	Crystal Oscillator	385-30937	065
X2283	20,250000 MHz HC49U4H	Crystal Oscillator	385-30937	065
X2336	12,000000 MHz HC49U CL=12pF	Crystal Oscillator	385-29247	065
X2642	5,000000 MHz HC49U	Crystal Oscillator	385-30969	065
X2841	Piezo Filter 429,0 KHz	Ceramic Filter	386-18622	065
X2876	6,000000 MHz HC49U CL=20pF	Crystal Oscillator	385-29248	065
X4831	Piezo Filter 4,5 MHz	Ceramic Filter	386-27305.020	065
	WIDERSTÄNDE	**RESISTORS**		
R2987	10R J 0207 0,25W WIDSI	Resistor	366-20353	065
	SMD TEILE	**SMD PARTS**		
D2002	BAS316 SOD323	Diode	351-27952	065
D2003	BAS316 SOD323	Diode	351-27952	065
D2020	BAS316 SOD323	Diode	351-27952	065
D2033	DIOZD 5V6 J 0W25 SOD323	Diode	351-31054	065
D2293	0A5 20V SOD123 Schottky	Diode	351-30905	065

Signal Board 88557.065

Pos.Nr. Item N°.	Bestell-Bezeichnung	Description List Part N°.	Bestell-Nr.	Var. Var.
	SMD TEILE	**SMD PARTS**		
D2501	DIOZD 30V J 0W25 SOD323	Diode	351-31055	065
D2502	DIOZD 5V6 J 0W25 SOD323	Diode	351-31054	065
D2503	DIOZD 5V6 J 0W25 SOD323	Diode	351-31054	065
D2508	DIOZD 5V6 J 0W25 SOD323	Diode	351-31054	065
D2556	BAS316 SOD323	Diode	351-27952	065
D2559	0A5 20V SOD123 Schottky	Diode	351-30905	065
D2602	DIOZD 5V6 J 0W25 SOD323	Diode	351-31054	065
D2666	DIOZD 5V6 J 0W25 SOD323	Diode	351-31054	065
D2671	0A5 20V SOD123 Schottky	Diode	351-30905	065
D2681	BAS316 SOD323	Diode	351-27952	065
D2682	BAS316 SOD323	Diode	351-27952	065
D2683	BAS316 SOD323	Diode	351-27952	065
D2701	DIOZD 5V6 J 0W25 SOD323	Diode	351-31054	065
D2702	0A5 20V SOD123 Schottky	Diode	351-30905	065
D2703	DIOZD 5V6 J 0W25 SOD323	Diode	351-31054	065
D2734	0A5 20V SOD123 Schottky	Diode	351-30905	065
D2735	BAS316 SOD323	Diode	351-27952	065
D2736	0A5 20V SOD123 Schottky	Diode	351-30905	065
D2788	DIOZD 5V6 J 0W25 SOD323	Diode	351-31054	065
D2789	DIOZD 5V6 J 0W25 SOD323	Diode	351-31054	065
D2815	DIOZD 5V6 J 0W25 SOD323	Diode	351-31054	065
D2818	DIOZD 5V6 J 0W25 SOD323	Diode	351-31054	065
D2843	BAS316 SOD323	Diode	351-27952	065
D2848	0A5 20V SOD123 Schottky	Diode	351-30905	065
D2849	0A5 20V SOD123 Schottky	Diode	351-30905	065
D2850	0A5 20V SOD123 Schottky	Diode	351-30905	065
D2856	BAS316 SOD323	Diode	351-27952	065
D2857	0A5 20V SOD123 Schottky	Diode	351-30905	065
D2860	0A5 20V SOD123 Schottky	Diode	351-30905	065
D2863	BAS316 SOD323	Diode	351-27952	065
D2882	DIOZD 5V6 J 0W25 SOD323	Diode	351-31054	065
D2883	DIOZD 6V2 J 0W25 SOD323	Diode	351-31062	065
D2884	DIOZD 6V2 J 0W25 SOD323	Diode	351-31062	065
D2885	DIOZD 5V6 J 0W25 SOD323	Diode	351-31054	065
D2887	DIOZD 6V2 J 0W25 SOD323	Diode	351-31062	065
D2889	DIOZD 6V2 J 0W25 SOD323	Diode	351-31062	065
D2930	DIOZD 5V6 J 0W25 SOD323	Diode	351-31054	065
D2964	BAS316 SOD323	Diode	351-27952	065
D2967	BAS316 SOD323	Diode	351-27952	065
D2982	BAS316 SOD323	Diode	351-27952	065
D2984	BAS316 SOD323	Diode	351-27952	065
D2986	DIOZD 5V6 J 0W25 SOD323	Diode	351-31054	065
D2987	BAS316 SOD323	Diode	351-27952	065
D2988	BAS316 SOD323	Diode	351-27952	065
D2989	BAS316 SOD323	Diode	351-27952	065
Q2001	BC847BW SOT323	Transistor	344-27272	065
Q2002	BC807-25 SOT23	Transistor	344-16064	065
Q2003	BC857BW SOT323	Transistor	344-28404	065
Q2004	BC857BW SOT323	Transistor	344-28404	065
Q2005	BC847BW SOT323	Transistor	344-27272	065
Q2006	BC857BW SOT323	Transistor	344-28404	065
Q2066	BC857BW SOT323	Transistor	344-28404	065
Q2103	BCW66H	Transistor	344-26051	065
Q2114	BC847BW SOT323	Transistor	344-27272	065

Pos.Nr. Item N°.	Bestell-Bezeichnung	Description List Part N°.	Bestell-Nr.	Var. Var.
	SMD TEILE	**SMD PARTS**		
Q2117	BC847BW SOT323	Transistor	344-27272	065
Q2120	BC847BW SOT323	Transistor	344-27272	065
Q2121	BC847BW SOT323	Transistor	344-27272	065
Q2122	BC857BW SOT323	Transistor	344-28404	065
Q2123	BC857BW SOT323	Transistor	344-28404	065
Q2128	BC847BW SOT323	Transistor	344-27272	065
Q2129	BC847BW SOT323	Transistor	344-27272	065
Q2130	BC857BW SOT323	Transistor	344-28404	065
Q2148	BC847BW SOT323	Transistor	344-27272	065
Q2149	BC847BW SOT323	Transistor	344-27272	065
Q2150	BC847BW SOT323	Transistor	344-27272	065
Q2173	BC857BW SOT323	Transistor	344-28404	065
Q2181	BC847BW SOT323	Transistor	344-27272	065
Q2182	BC857BW SOT323	Transistor	344-28404	065
Q2191	BC847BW SOT323	Transistor	344-27272	065
Q2192	BC847BW SOT323	Transistor	344-27272	065
Q2193	BC847BW SOT323	Transistor	344-27272	065
Q2203	BC857BW SOT323	Transistor	344-28404	065
Q2204	BC847BW SOT323	Transistor	344-27272	065
Q2205	BC857BW SOT323	Transistor	344-28404	065
Q2206	BC847BW SOT323	Transistor	344-27272	065
Q2207	BC857BW SOT323	Transistor	344-28404	065
Q2208	BC847BW SOT323	Transistor	344-27272	065
Q2340	BC847BW SOT323	Transistor	344-27272	065
Q2478	BC857BW SOT323	Transistor	344-28404	065
Q2537	BC847BW SOT323	Transistor	344-27272	065
Q2541	BC847BW SOT323	Transistor	344-27272	065
Q2546	BC857BW SOT323	Transistor	344-28404	065
Q2551	BC847BW SOT323	Transistor	344-27272	065
Q2556	BC857BW SOT323	Transistor	344-28404	065
Q2566	BC857BW SOT323	Transistor	344-28404	065
Q2571	BC847BW SOT323	Transistor	344-27272	065
Q2630	BC857BW SOT323	Transistor	344-28404	065
Q2631	BC847BW SOT323	Transistor	344-27272	065
Q2641	BC857BW SOT323	Transistor	344-28404	065
Q2642	BC847BW SOT323	Transistor	344-27272	065
Q2651	BC857BW SOT323	Transistor	344-28404	065
Q2652	BC847BW SOT323	Transistor	344-27272	065
Q2683	BC847BW SOT323	Transistor	344-27272	065
Q2701	BC847BW SOT323	Transistor	344-27272	065
Q2736	BC847BW SOT323	Transistor	344-27272	065
Q2746	BC847BW SOT323	Transistor	344-27272	065
Q2752	BC847BW SOT323	Transistor	344-27272	065
Q2772	BC847BW SOT323	Transistor	344-27272	065
Q2775	BC847BW SOT323	Transistor	344-27272	065
Q2778	BC847BW SOT323	Transistor	344-27272	065
Q2791	SN7002 SOT23 0A19 60V NCH	Transistor	344-29134	065
Q2793	SN7002 SOT23 0A19 60V NCH	Transistor	344-29134	065
Q2841	BC807-25 SOT23	Transistor	344-16064	065
Q2862	BC847BW SOT323	Transistor	344-27272	065
Q2883	SN7002 SOT23 0A19 60V NCH	Transistor	344-29134	065
Q2888	SN7002 SOT23 0A19 60V NCH	Transistor	344-29134	065
Q2943	BC847BW SOT323	Transistor	344-27272	065
Q2954	BC857BW SOT323	Transistor	344-28404	065

Signal Board 88557.065

Pos.Nr. Item N°.	Bestell-Bezeichnung	Description List Part N°.	Bestell-Nr.	Var. Var.
	SMD TEILE	**SMD PARTS**		
Q2971	SN7002 SOT23 0A19 60V NCH	Transistor	344-29134	065
Q2972	BC857BW SOT323	Transistor	344-28404	065
Q2973	BSV52 SOT23	Transistor	344-16207	065
Q2974	BC807-25 SOT23	Transistor	344-16064	065
Q2976	BC857BW SOT323	Transistor	344-28404	065
Q2993	BC847BW SOT323	Transistor	344-27272	065
Q4127	BFR93AW SOT323	Transistor	344-29926	065
Q4137	BFR93AW SOT323	Transistor	344-29926	065
Q4147	BFR93AW SOT323	Transistor	344-29926	065
Q4210	BF1009SW SOT323	Transistor	344-28301	065
Q4310	BF1009SW SOT323	Transistor	344-28301	065
Q4410	BF1009SW SOT323	Transistor	344-28301	065
R2441	Wid.-Array 10Rx4 1608x4	Resistor	374-29922	065
R2442	Wid.-Array 10Rx4 1608x4	Resistor	374-29922	065

Optische Bildröhre vormont. 88748.050

Pos.Nr. Item N°.	Bestell-Bezeichnung	Description List Part N°.	Bestell-Nr.	Var. Var.
	BAUGRUPPEN	**UNITS**		
U 10	optische Bildröhre	Picture Tube	345-31093.001	050
U 20	DVI-Extension kpl. R2550/RA2550	P.C.B	396-88682.050	050
U 40	SIM2 HD2-Kit	Scaffolding Access.	291-31181	050
U 42	SIM2 HD2-Interposer-Kit	Socket	320-31508	050

optische Bildröhre 31093.001

Pos.Nr. Item N°.	Bestell-Bezeichnung	Description List Part N°.	Bestell-Nr.	Var. Var.
	BAUGRUPPEN	**UNITS**		
U 10	Lampe 120W ARTICOS 55	Incandescent Lamp	383-31182	001

Vorschaltgerät Power Supply 31153.050

Pos.Nr. Item N°.	Bestell-Bezeichnung	Description List Part N°.	Bestell-Nr.	Var. Var.
	BAUGRUPPEN	**UNITS**		
U 10	Elektronisches Vorschaltgerät 120W	Scaffolding Access.	291-31153	050
	KONDENSATOREN	**CAPACITORS**		
20	Elko 22U M 450V	Electrolytic Capacitor	360-31777	050
30	470P K 1000V	Capacitor	357-23994.020	050

Frequenzweiche Cross-over network 85729.078

Pos.Nr. Item N°.	Bestell-Bezeichnung	Description List Part N°.	Bestell-Nr.	Var. Var.
	SPEZIALTEILE	**SPECIAL PARTS**		
N05	Kabelbaum 3/2-pol. 200 lg. UL nat.	Connecting Cable	171-88432.059	078
W01	Stiftw. vert. 3-p. nat. 2R50 EH	Contact Ledge	326-28095	078

Rear Board

Art.-Nr. 88558.050

Pos.Nr. ItemN°.	Bestell-Bezeichnung	Description	Bestell-Nr. List Part N°.	Var. Var.
	INTEGR. SCHALTUNGEN	**INTEGRATED CIRCUITS**		
I3011	TEA6422D SO28	Integrated Circuit	350-25732	050
I3021	TEA6420D SO28	Integrated Circuit	350-28564	050
I3041	ICMOS HEF4053D SO16	Integrated Circuit	350-24881	050
I3051	TEA6415 SO20L	Integrated Circuit	350-25733	050
I3061	TEA6415 SO20L	Integrated Circuit	350-25733	050
I3071	ICMOS HEF4053D SO16	Integrated Circuit	350-24881	050
I3951	ICMOS HEF4053D SO16	Integrated Circuit	350-24881	050
	BUCHSEN/FASSUNGEN	**SOCKETS**		
11	Kurzschluß-Stecker RM2,5	Plug	321-16821	050
W3047	Cinchbuchse 2-fach rot/weiß	Socket	323-31028	050
W3101	SCART-Buchse	Socket	323-19542	050
W3201	SCART-Buchse	Socket	323-19542	050
W3301	SCART-Buchse	Socket	323-19542	050
W3335	Cinchbuchse 2-fach rot/weiß	Socket	323-31028	050
W3911	Cinchbuchse 3-fach schwarz	Socket	323-31091	050
W3927	Cinchbuchse 2-fach rot/weiß	Socket	323-31028	050
W3954	Composit JACKB. 3ST.YKC21-5699	Socket	323-28085	050
	SMD TEILE	**SMD PARTS**		
D3172	DIOZD 5V6 J 0W5 SOD-80 ZMM5.6	Diode	351-16758	050
D3272	DIOZD 5V6 J 0W5 SOD-80 ZMM5.6	Diode	351-16758	050
D3372	DIOZD 5V6 J 0W5 SOD-80 ZMM5.6	Diode	351-16758	050
Q3042	BC847BW SOT323	Transistor	344-27272	050
Q3076	BC857BW SOT323	Transistor	344-28404	050
Q3078	BC847BW SOT323	Transistor	344-27272	050
Q3082	BC857BW SOT323	Transistor	344-28404	050
Q3084	BC857BW SOT323	Transistor	344-28404	050
Q3093	BC847BW SOT323	Transistor	344-27272	050
Q3152	BC847BW SOT323	Transistor	344-27272	050
Q3172	BC817-25W SOT323	Transistor	344-28405	050
Q3176	BC847BW SOT323	Transistor	344-27272	050
Q3181	BC857BW SOT323	Transistor	344-28404	050
Q3272	BC817-25W SOT323	Transistor	344-28405	050
Q3276	BC847BW SOT323	Transistor	344-27272	050
Q3281	BC857BW SOT323	Transistor	344-28404	050
Q3312	BC847BW SOT323	Transistor	344-27272	050
Q3322	BC847BW SOT323	Transistor	344-27272	050
Q3331	BC847BW SOT323	Transistor	344-27272	050
Q3333	BC847BW SOT323	Transistor	344-27272	050
Q3336	BC847BW SOT323	Transistor	344-27272	050
Q3338	BC847BW SOT323	Transistor	344-27272	050
Q3341	BC857BW SOT323	Transistor	344-28404	050
Q3368	BC847BW SOT323	Transistor	344-27272	050
Q3372	BC817-25W SOT323	Transistor	344-28405	050
Q3376	BC847BW SOT323	Transistor	344-27272	050
Q3381	BC857BW SOT323	Transistor	344-28404	050
Q3398	BC847BW SOT323	Transistor	344-27272	050
Q3852	BC847BW SOT323	Transistor	344-27272	050
Q3857	BC847BW SOT323	Transistor	344-27272	050
Q3874	BC847BW SOT323	Transistor	344-27272	050
Q3884	BC847BW SOT323	Transistor	344-27272	050
Q3897	BC847BW SOT323	Transistor	344-27272	050
Q3951	BC847BW SOT323	Transistor	344-27272	050
Q3973	BC847BW SOT323	Transistor	344-27272	050
Q3976	BC857BW SOT323	Transistor	344-28404	050
Q3983	BC847BW SOT323	Transistor	344-27272	050

Rear Board US

Art.-Nr. 88681.050

Pos.Nr. ItemN°.	Bestell-Bezeichnung	Description	Bestell-Nr. List Part N°.	Var. Var.
	BAUGRUPPEN	**UNITS**		
11	Audio-Erweiterung kpl. SA2550/RA2550	P.C.B	396-88698.050	050
	INTEGR. SCHALTUNGEN	**INTEGRATED CIRCUITS**		
I111	ICMOS Video-Schalter DMP8	Integrated Circuit	350-28875	050
I131	ICMOS Video-Schalter DMP8	Integrated Circuit	350-28875	050
I151	ICMOS Video-Schalter DMP8	Integrated Circuit	350-28875	050
I201	TEA6422D SO28	Integrated Circuit	350-25732	050
I301	TEA6415 SO20L	Integrated Circuit	350-25733	050
I401	TEA6415 SO20L	Integrated Circuit	350-25733	050
I501	ICMOS FMS6418A SO16	Integrated Circuit	350-31255	050
I591	IC-VR 3V30 0A30 SOT223	Integrated Circuit	350-29462	050
	BUCHSEN/FASSUNGEN	**SOCKETS**		
W161	Cinch-Buchse 2-fach rot/weiß	Socket	323-31028	050
W181	Cinch-Buchse 2-fach rot/weiß	Socket	323-31028	050
W251	Cinch-Buchse 3-fach weiß/rot/schwarz	Socket	323-31240	050
	SMD TEILE	**SMD PARTS**		
D511	DIOZD 5V6 J 0W25 SOD323	Diode	351-31054	050
D521	DIOZD 5V6 J 0W25 SOD323	Diode	351-31054	050
D531	DIOZD 5V6 J 0W25 SOD323	Diode	351-31054	050
D541	DIOZD 5V6 J 0W25 SOD323	Diode	351-31054	050
D551	DIOZD 5V6 J 0W25 SOD323	Diode	351-31054	050
D561	DIOZD 5V6 J 0W25 SOD323	Diode	351-31054	050
D651	DIOZD 5V6 J 0W25 SOD323	Diode	351-31054	050
D661	DIOZD 5V6 J 0W25 SOD323	Diode	351-31054	050
D671	DIOZD 5V6 J 0W25 SOD323	Diode	351-31054	050
Q254	BC847BW SOT323	Transistor	344-27272	050
Q256	BC847BW SOT323	Transistor	344-27272	050
Q259	BC857BW SOT323	Transistor	344-28404	050
Q264	BC847BW SOT323	Transistor	344-27272	050
Q266	BC847BW SOT323	Transistor	344-27272	050
Q273	BC847BW SOT323	Transistor	344-27272	050
Q322	BC847BW SOT323	Transistor	344-27272	050
Q332	BC847BW SOT323	Transistor	344-27272	050
Q342	BC847BW SOT323	Transistor	344-27272	050
Q352	BC847BW SOT323	Transistor	344-27272	050
Q437	BC847BW SOT323	Transistor	344-27272	050
Q452	BC847BW SOT323	Transistor	344-27272	050
Q462	BC847BW SOT323	Transistor	344-27272	050
Q472	BC857BW SOT323	Transistor	344-28404	050
Q477	BC857BW SOT323	Transistor	344-28404	050
Q512	BC847BW SOT323	Transistor	344-27272	050
Q522	BC847BW SOT323	Transistor	344-27272	050
Q532	BC847BW SOT323	Transistor	344-27272	050
Q542	BC847BW SOT323	Transistor	344-27272	050
Q552	BC847BW SOT323	Transistor	344-27272	050
Q562	BC847BW SOT323	Transistor	344-27272	050
Q572	BF799LK	Transistor	344-17798	050
Q582	BF799LK	Transistor	344-17798	050
Q592	BF799LK	Transistor	344-17798	050
Q654	BC847BW SOT323	Transistor	344-27272	050
Q664	BC847BW SOT323	Transistor	344-27272	050
Q674	BC847BW SOT323	Transistor	344-27272	050

Rear Board US

Art.-Nr. 88681.050

Pos.Nr. ItemN°.	Bestell-Bezeichnung	Description	Bestell-Nr. List Part N°.	Var. Var.
	ALLGEM. MECHAN. TEILE	**COMMON MECHANICAL PARTS**		
H206	Halter/Diode	Holder	602-27977	051
H207	Halter/Diode	Holder	602-27977	051
	INTEGR. SCHALTUNGEN	**INTEGRATED CIRCUITS**		
I016	IR-Empf nger vormontiert	Coupler	353-28926.050	051
	TRANSISTOREN	**TRANSISTORS**		
Q002	BC847B SOT23	Transistor	344-14974	051
	DIODEN	**DIODES**		
D201	ZD 5V6 SOD80 ZMM C ITT	Diode	351-16758	051
D202	ZD 5V6 SOD80 ZMM C ITT	Diode	351-16758	051
D204	ZD 5V6 SOD80 ZMM C ITT	Diode	351-16758	051
D205	ZD 5V6 SOD80 ZMM C ITT	Diode	351-16758	051
D206	LED LR 3369-H rot	Coupler	353-22140.Y20	051
D207	LED LG 3369-H grŸn	Coupler	353-22141.Y20	051

Scaler Board 88882.050-065

Pos.Nr. Item N°.	Bestell-Bezeichnung	Description List Part N°.	Bestell-Nr.	Var. Var.
	INTEGR. SCHALTUNGEN	**INTEGRATED CIRCUITS**		
I1100	ICMOS K4D263238 TQFP100 DDR-SDRAM	Integrated Circuit	350-30843	
I1101	82B715 SO8 BUS-Buffer-I2C	Integrated Circuit	350-31241	
I1102	ST24FC21 M 1 SO8	Integrated Circuit	350-28485	
I1103	IC-VR LM1117MPX-ADJ 0A80 SOT223	Integrated Circuit	350-29912	
I1104	IC-VR 2V50 1A50 DD-PAK LT1963	Integrated Circuit	350-30827	
I1105	IC-VR 2V50 1A50 DD-PAK LT1963	Integrated Circuit	350-30827	
I1106	IC-VR LM1117MPX-ADJ 0A80 SOT223	Integrated Circuit	350-29912	
I1107	LT1675CGN SSOP16 RGB-MUX	Integrated Circuit	350-30906	
I1108	ICMOS SII170 TQFP64 3V3 TRANS.HDCP	Integrated Circuit	350-31229	060
I1109	ST24FC21 M 1 SO8	Integrated Circuit	350-28485	060
I1110	ICMOS 74LVC1G04 SOT353 Inverter	Integrated Circuit	350-30912	
I1111	ICMOS 74 AC157 SO16	Integrated Circuit	350-28896	
I1112	IC-VR LM1117MPX-ADJ 0A80 SOT223	Integrated Circuit	350-29912	
I1114	ICMOS 24256 SO-8 EEPROM 256K I2C	Integrated Circuit	350-31206	
I1115	IC-VR LF33CDT DPAK 3,3V	Integrated Circuit	350-29472	
I1116	IC-VR 2V50 0A50 SOT223	Integrated Circuit	350-29461	
I1341	IC-VR 3V30 G 0A15 SOT23-5 ZXCL3#	Integrated Circuit	350-30710	060
I1351	IC-VR 3V30 G 0A15 SOT23-5 ZXCL3#	Integrated Circuit	350-30710	060
I1401	82B715 SO8 BUS-Buffer-I2C	Integrated Circuit	350-31241	060
I1508	ICMOS SII170 TQFP64 3V3 TRANS.HDCP	Integrated Circuit	350-31229	050
I1508	ICMOS SII170 TQFP64 3V3 TRANS.HDCP	Integrated Circuit	350-31229	055
I1508	ICMOS SII170 TQFP64 3V3 TRANS.HDCP	Integrated Circuit	350-31229	065
I1541	IC-VR 3V30 G 0A15 SOT23-5 ZXCL3#	Integrated Circuit	350-30710	050
I1541	IC-VR 3V30 G 0A15 SOT23-5 ZXCL3#	Integrated Circuit	350-30710	055
I1541	IC-VR 3V30 G 0A15 SOT23-5 ZXCL3#	Integrated Circuit	350-30710	065
I1551	IC-VR 3V30 G 0A15 SOT23-5 ZXCL3#	Integrated Circuit	350-30710	050
I1551	IC-VR 3V30 G 0A15 SOT23-5 ZXCL3#	Integrated Circuit	350-30710	055
I1551	IC-VR 3V30 G 0A15 SOT23-5 ZXCL3#	Integrated Circuit	350-30710	065
	BUCHSEN/FASSUNGEN	**SOCKETS**		
W110	Buchse D-SUB 44-pol.	Socket	323-30983	060
W1101	Systembuchse DVI 900	Socket	323-29455	
W1103	Subminiatur-Buchse 15-pol..	Socket	323-28415	060
W1510	Systembuchse DVI 900	Socket	323-29455	050
W1510	Systembuchse DVI 900	Socket	323-29455	055
W1510	Systembuchse DVI 900	Socket	323-29455	065
	QUARZE/FILTER	**QUARTZES**		
X1100	Q-Osz. 25,000000 MHz SMO7X5MM 3V3	Crystal Oscillator	385-30841	
	WIDERSTÄNDE	**RESISTORS**		
R1102	Wid.-Array 4x22R J 4x0603	Resistor	374-30936	
R1103	Wid.-Array 4x22R J 4x0603	Resistor	374-30936	
R1108	Wid.-Array 4x51R J 4x0603	Resistor	374-30935	
R1110	Wid.-Array 4x51R J 4x0603	Resistor	374-30935	
R1115	Wid.-Array 4x51R J 4x0603	Resistor	374-30935	
R1117	Wid.-Array 4x51R J 4x0603	Resistor	374-30935	
R1120	Wid.-Array 4x51R J 4x0603	Resistor	374-30935	
R1121	Wid.-Array 4x51R J 4x0603	Resistor	374-30935	
R1122	Wid.-Array 4x51R J 4x0603	Resistor	374-30935	
R1216	Wid.-Array 4x24R J 4x0603	Resistor	374-30934	
R1220	Wid.-Array 4x24R J 4x0603	Resistor	374-30934	
R1226	Wid.-Array 4x24R J 4x0603	Resistor	374-30934	
R1231	Wid.-Array 4x24R J 4x0603	Resistor	374-30934	
R1236	Wid.-Array 4x24R J 4x0603	Resistor	374-30934	
R1238	Wid.-Array 4x22R J 4x0603	Resistor	374-30936	050
R1238	Wid.-Array 4x22R J 4x0603	Resistor	374-30936	055

Scaler Board 88882.050-065

Pos.Nr. Item N°.	Bestell-Bezeichnung	Description List Part N°.	Bestell-Nr.	Var. Var.
	WIDERSTÄNDE	**RESISTORS**		
R1238	Wid.-Array 4x22R J 4x0603	Resistor	374-30936	065
R1240	Wid.-Array 4x24R J 4x0603	Resistor	374-30934	
R1242	Wid.-Array 4x24R J 4x0603	Resistor	374-30934	
R1243	Wid.-Array 4x22R J 4x0603	Resistor	374-30936	050
R1243	Wid.-Array 4x22R J 4x0603	Resistor	374-30936	055
R1243	Wid.-Array 4x22R J 4x0603	Resistor	374-30936	065
R1247	Wid.-Array 4x24R J 4x0603	Resistor	374-30934	
R1248	Wid.-Array 4x22R J 4x0603	Resistor	374-30936	050
R1248	Wid.-Array 4x22R J 4x0603	Resistor	374-30936	055
R1248	Wid.-Array 4x22R J 4x0603	Resistor	374-30936	065
R1252	Wid.-Array 4x22R J 4x0603	Resistor	374-30936	050
R1252	Wid.-Array 4x22R J 4x0603	Resistor	374-30936	055
R1252	Wid.-Array 4x22R J 4x0603	Resistor	374-30936	065
R1255	Wid.-Array 4x24R J 4x0603	Resistor	374-30934	
R1256	Wid.-Array 4x24R J 4x0603	Resistor	374-30934	
R1259	Wid.-Array 4x24R J 4x0603	Resistor	374-30934	
R1260	Wid.-Array 4x24R J 4x0603	Resistor	374-30934	
R1261	Wid.-Array 4x24R J 4x0603	Resistor	374-30934	
R1262	Wid.-Array 4x24R J 4x0603	Resistor	374-30934	
R1263	Wid.-Array 4x22R J 4x0603	Resistor	374-30936	050
R1263	Wid.-Array 4x22R J 4x0603	Resistor	374-30936	055
R1263	Wid.-Array 4x22R J 4x0603	Resistor	374-30936	065
R1264	Wid.-Array 4x22R J 4x0603	Resistor	374-30936	050
R1264	Wid.-Array 4x22R J 4x0603	Resistor	374-30936	055
R1264	Wid.-Array 4x22R J 4x0603	Resistor	374-30936	065
R1265	Wid.-Array 4x22R J 4x0603	Resistor	374-30936	
R1266	Wid.-Array 4x22R J 4x0603	Resistor	374-30936	
R1438	Wid.-Array 4x22R J 4x0603	Resistor	374-30936	060
R1443	Wid.-Array 4x22R J 4x0603	Resistor	374-30936	060
R1448	Wid.-Array 4x22R J 4x0603	Resistor	374-30936	060
R1452	Wid.-Array 4x22R J 4x0603	Resistor	374-30936	060
R1463	Wid.-Array 4x22R J 4x0603	Resistor	374-30936	060
R1464	Wid.-Array 4x22R J 4x0603	Resistor	374-30936	060
	SMD TEILE	**SMD PARTS**		
D1100	BAS316 SOD323	Diode	351-27952	
D1101	BAS316 SOD323	Diode	351-27952	
D1103	DIOZD 12V0 J 0W25 SOD323	Diode	351-31128	
D1104	DIOZD 12V0 J 0W25 SOD323	Diode	351-31128	
D1106	BAS316 SOD323	Diode	351-27952	060
D1108	BAV 99W SOT323	Diode	351-27469	
D1110	BAV 99W SOT323	Diode	351-27469	050
D1111	BAV 99W SOT323	Diode	351-27469	
D1112	BAS316 SOD323	Diode	351-27952	060
D1113	BAV 99W SOT323	Diode	351-27469	
D1114	BAV 99W SOT323	Diode	351-27469	
D1116	0A5 20V SOD123 Schottky	Diode	351-30905	
D1118	DIOZD 6V2 J 0W25 SOD323	Diode	351-31062	
D1119	DIOZD 6V2 J 0W25 SOD323	Diode	351-31062	
D1120	DIOZD 6V2 J 0W25 SOD323	Diode	351-31062	
D1121	DIOZD 6V2 J 0W25 SOD323	Diode	351-31062	
D1122	0A5 20V SOD123 Schottky	Diode	351-30905	
D1123	DIOZD 5V6 J 0W25 SOD323	Diode	351-31054	
D1124	DIOZD 5V6 J 0W25 SOD323	Diode	351-31054	
D1126	0A5 20V SOD123 Schottky	Diode	351-30905	050

Scaler Board 88882.050-065

Pos.Nr. Item N°.	Bestell-Bezeichnung	Description List Part N°.	Bestell-Nr.	Var. Var.
	SMD TEILE	**SMD PARTS**		
D1126	0A5 20V SOD123 Schottky	Diode	351-30905	055
D1126	0A5 20V SOD123 Schottky	Diode	351-30905	065
D1310	DIOZD 6V2 J 0W25 SOD323	Diode	351-31062	050
D1310	DIOZD 6V2 J 0W25 SOD323	Diode	351-31062	055
D1310	DIOZD 6V2 J 0W25 SOD323	Diode	351-31062	065
D1311	DIOZD 6V2 J 0W25 SOD323	Diode	351-31062	050
D1311	DIOZD 6V2 J 0W25 SOD323	Diode	351-31062	055
D1311	DIOZD 6V2 J 0W25 SOD323	Diode	351-31062	065
D1361	ESD-Suppressor 0603	Diode	351-31275	
D1362	ESD-Suppressor 0603	Diode	351-31275	
D1363	ESD-Suppressor 0603	Diode	351-31275	
D1364	ESD-Suppressor 0603	Diode	351-31275	
D1365	ESD-Suppressor 0603	Diode	351-31275	
D1366	ESD-Suppressor 0603	Diode	351-31275	
D1367	ESD-Suppressor 0603	Diode	351-31275	
D1368	ESD-Suppressor 0603	Diode	351-31275	
I1113	ICMOS SAA6714V1C SOT553-1 TFT-CONTR.	Diode	351-31468	
Q1100	BC847BW SOT323	Transistor	344-27272	
Q1101	BC847BW SOT323	Transistor	344-27272	
Q1102	BC847BW SOT323	Transistor	344-27272	
Q1103	BC847BW SOT323	Transistor	344-27272	
Q1104	BC847BW SOT323	Transistor	344-27272	
Q1107	BC847BW SOT323	Transistor	344-27272	060
Q1108	BC847BW SOT323	Transistor	344-27272	
Q1291	BC847BW SOT323	Transistor	344-27272	

Tuner / ZF Tuner / IF Art.-Nr. 87271.051

Pos.Nr. Item N°.	Bestell-Bezeichnung	Description List Part N°.	Bestell-Nr. Var.	Var.
	INTEGR. SCHALTUNGEN	**INTEGRATED CIRCUITS**		
I4500	TDA5637 SOT340	Integrated Circuit	350-27278	051
I4600	TSA5523M SOT266	Integrated Circuit	350-27275	051
I4800	TDA9818 TS-SSOP24	Integrated Circuit	350-28463	051
	DIODEN	**DIODES**		
D4203	DIOVC 0A02 30V SOD323 BB640	Diode	351-26568	051
D4204	DIOVC 0A02 30V SOD323 BB535	Diode	351-26570	051
D4222	DIOVC 0A02 30V SOD323 BB640	Diode	351-26568	051
D4241	DIOVC 0A02 30V SOD323 BB640	Diode	351-26568	051
D4242	DIOVC 0A02 30V SOD323 BB535	Diode	351-26570	051
D4303	DIOVC 0A02 30V SOD323 BB639	Diode	351-26571	051
D4304	DIOVC 0A02 30V SOD323 BB535	Diode	351-26570	051
D4322	DIOVC 0A02 30V SOD323 BB639	Diode	351-26571	051
D4341	DIOVC 0A02 30V SOD323 BB639	Diode	351-26571	051
D4403	DIOVC 0A02 30V SOD323 BB535	Diode	351-26570	051
D4422	DIOVC 0A02 30V SOD323 BB535	Diode	351-26570	051
D4441	DIOVC 0A02 30V SOD323 BB535	Diode	351-26570	051
D4508	DIOVC 0A02 30V SOD323 BB640	Diode	351-26568	051
D4527	DIOVC 0A02 30V SOD323 BB639	Diode	351-26571	051
D4551	DIOVC 0A02 30V SOD323 BB535	Diode	351-26570	051
D4806	BAV 99W SOT323	Diode	351-27469	051

Tuner / ZF Tuner / IF Art.-Nr. 87271.051

Pos.Nr. Item N°.	Bestell-Bezeichnung	Description List Part N°.	Bestell-Nr. Var.	Var.
	SMD TEILE	**SMD PARTS**		
D4702	BA 592 SOD323	Diode	351-25810	051
D4703	BA 592 SOD323	Diode	351-25810	051
D4751	BA 592 SOD323	Diode	351-25810	051
D4752	BA 592 SOD323	Diode	351-25810	051
D4771	BA 592 SOD323	Diode	351-25810	051
D4772	BA 592 SOD323	Diode	351-25810	051
D4781	BA 592 SOD323	Diode	351-25810	051
D4832	BA 592 SOD323	Diode	351-25810	051
Q4702	Digital SOT323 NPN 50V 70mA 47K	Transistor	344-27270	051
Q4709	Digital SOT323 NPN 50V 70mA 47K	Transistor	344-27270	051
Q4752	Digital SOT323 NPN 50V 100mA 47K	Transistor	344-28555	051
Q4754	Digital SOT323 NPN 50V 70mA 47K	Transistor	344-27270	051
Q4772	Digital SOT323 NPN 50V 100mA 47K	Transistor	344-28555	051
Q4774	Digital SOT323 NPN 50V 70mA 47K	Transistor	344-27270	051
Q4804	BC857BW SOT323	Transistor	344-28404	051
Q4832	BCR198W SOT323 PNP	Transistor	344-27269	051
Q4833	BC847BW SOT323	Transistor	344-27272	051

Tuner / ZF Tuner / IF Art.-Nr. 87345.060

Pos.Nr. Item N°.	Bestell-Bezeichnung	Description	Bestell-Nr. List Part N°.	Var. Var.
	SPULEN	**COILS,**		
L231	Spule	Coil	297-27569.001	060
L232	Spule	Coil	297-27569.001	060
L233	Spule	Coil	297-27561.001	060
L301	Spule	Coil	297-27566.001	060
L311	Luftspule	Coil	297-27571	060
L331	Spule	Coil	297-27561.001	060
L332	Spule	Coil	297-27683.001	060
L351	Spule	Coil	297-27563.001	060
L352	Spule	Coil	297-27563.001	060
L401	Spule	Coil	297-27562.001	060
L411	Spule	Coil	297-27568.001	060
L422	Spule	Coil	297-27559.001	060
L431	Spule	Coil	297-27546.001	060
L432	Spule	Coil	297-27683.001	060
L451	Spule	Coil	297-27682.001	060
L452	Spule	Coil	297-27682.001	060
L503	Spule	Coil	297-27564.001	060
L523	Spule	Coil	297-27552.001	060
L543	Spule	Coil	297-27548.001	060
L546	Spule	Coil	297-27559.001	060
L701	Dr. 0U68 K 0305RA-R68K TDK	Choke	298-27591.020	060
L816	Spule	Coil	297-27743	060
L831	Dr. 6U8 J EL0305RA-6R8J TDK	Choke	298-27588.020	060
P821	Potentiometer 10K 6mm Kohleschicht hor.	Potentiometer	375-27744	060
Q210	Transistor BF1100WR SOT343	Transistor	344-27268	060
Q310	Transistor BF1100WR SOT343	Transistor	344-27268	060
Q410	Transistor BF1100WR SOT343	Transistor	344-27268	060
Q836	Transistor BC847B SOT23	Transistor	344-14974	060
Q853	Transistor BC847BW SOT323	Transistor	344-27272	060

Tuner / ZF Tuner / IF Art.-Nr. 87345.060

Pos.Nr. Item N°.	Bestell-Bezeichnung	Description	Bestell-Nr. List Part N°.	Var. Var.
W100	Koax-Buchse	Socket	323-27599	060
W200	Kontaktleiste 6-pol. STLIN-1470ATT-006/11	Contakt Ledge	326-27320.016	060
W800	Kontaktleiste 5-pol. STLIN-1470ATT-005/9	Contakt Ledge	326-27320.015	060
X751	Filter OFW K 9463-M	Filter	290-25323.Y20	060
X771	Filter OFW K 9461-M	Filter	290-25216.Y20	060
X831	Piezo Filter	Ceramic Filter	386-27630.020	060
X832	Piezo Filter 4,5 MHz	Ceramic Filter	386-27305.020	060

Tuner/ZF Tuner/IF Art.-Nr. 87507.051

Pos.Nr. Item N°.	Bestell-Bezeichnung	Description	Bestell-Nr. List Part N°.	Var. Var.
	VERBINDUNGSLEITUNG	**CONNECTING CABLES**		
50	Antennenkabel 2.4m mit Winkelstecker	Connecting Cable	169-27470001	051
	INTEGR.SCHALTUNGEN	**INTEGRATED CIRCUITS**		
I4500	IC TDA5637 SOT340	Integrated Circuit	350-27278	051
I4600	IC TSA5523M SOT266	Integrated Circuit	350-27275	051
I4800	IC TDA9817 SDIP24	Integrated Circuit	349-27337	051
I4800	IC TDA9817 TS-SSOP24	Integrated Circuit	350-28929	051
	DIODEN	**DIODES**		
D4203	BB 640 SOD323	Diode	351-26568	051
D4204	BB 535 SOD323	Diode	351-26570	051
D4222	BB 640 SOD323	Diode	351-26568	051
D4241	BB 640 SOD323	Diode	351-26568	051
D4242	BB 535 SOD323	Diode	351-26570	051
D4303	BB 639 SOD323	Diode	351-26571	051
D4304	BB 535 SOD323	Diode	351-26570	051
D4322	BB 639 SOD323	Diode	351-26571	051
D4341	BB 639 SOD323	Diode	351-26571	051
D4403	BB 535 SOD323	Diode	351-26570	051
D4422	BB 535 SOD323	Diode	351-26570	051
D4441	BB 535 SOD323	Diode	351-26570	051
D4508	BB 640 SOD323	Diode	351-26568	051
D4527	BB 639 SOD323	Diode	351-26571	051
D4551	BB 535 SOD323	Diode	351-26570	051
D4806	BAV 99W SOT323	Diode	351-27469	051
	QUARZE/FILTER	**QUARTZES**		
X4831	Piezo Filter 4,5 MHz	Ceramic Filter	386-27305020	051

Pos.Nr. Item N°.	Bestell-Bezeichnung	Description List Part N°.	Bestell-Nr.	Var. Var.
	SPULEN/LAUTSPRECHER	**COILS,SPEAKERS**		
S4110	HF-Relais Omron G6Y-1 5DC	Relay	387-27950	050
	INTEGR. SCHALTUNGEN	**INTEGRATED CIRCUITS**		
I4500	TDA5637 SOT340	Integrated Circuit	350-27278	050
I4600	TSA5523M SOT266	Integrated Circuit	350-27275	050
I4800	TDA9817 SDIP24	Integrated Circuit	349-27337	050
	TRANSISTOREN	**TRANSISTORS**		
Q4110	BCR198W SOT323 PNP	Transistor	344-27269	050
	DIODEN	**DIODES**		
D4110	BAS316 SOD323	Diode	351-27952	050
D4203	DIOVC 0A02 30V SOD323 BB640	Diode	351-26568	050
D4204	DIOVC 0A02 30V SOD323 BB535	Diode	351-26570	050
D4222	DIOVC 0A02 30V SOD323 BB640	Diode	351-26568	050
D4241	DIOVC 0A02 30V SOD323 BB640	Diode	351-26568	050
D4242	DIOVC 0A02 30V SOD323 BB535	Diode	351-26570	050
D4303	DIOVC 0A02 30V SOD323 BB639	Diode	351-26571	050
D4304	DIOVC 0A02 30V SOD323 BB535	Diode	351-26570	050
	DIODEN	**DIODES**		
D4322	DIOVC 0A02 30V SOD323 BB639	Diode	351-26571	050
D4341	DIOVC 0A02 30V SOD323 BB639	Diode	351-26571	050
D4403	DIOVC 0A02 30V SOD323 BB535	Diode	351-26570	050
D4422	DIOVC 0A02 30V SOD323 BB535	Diode	351-26570	050
D4441	DIOVC 0A02 30V SOD323 BB535	Diode	351-26570	050
D4508	DIOVC 0A02 30V SOD323 BB640	Diode	351-26568	050
D4527	DIOVC 0A02 30V SOD323 BB639	Diode	351-26571	050
D4551	DIOVC 0A02 30V SOD323 BB535	Diode	351-26570	050
D4806	BAV 99W SOT323	Diode	351-27469	050
	QUARZE/FILTER	**QUARTZES**		
X4831	Piezo Filter 4,5 MHz	Ceramic Filter	386-27305.020	050
L231	Spule	Coil	297-27569.001	060
L232	Spule	Coil	297-27569.001	060
L233	Spule	Coil	297-27561.001	060
L301	Spule	Coil	297-27566.001	060
L311	Luftspule	Coil	297-27571	060
L331	Spule	Coil	297-27561.001	060
L332	Spule	Coil	297-27683.001	060
L351	Spule	Coil	297-27563.001	060
L352	Spule	Coil	297-27563.001	060
L401	Spule	Coil	297-27562.001	060
L411	Spule	Coil	297-27568.001	060
L422	Spule	Coil	297-27559.001	060
L431	Spule	Coil	297-27546.001	060
L432	Spule	Coil	297-27683.001	060
L451	Spule	Coil	297-27682.001	060
L452	Spule	Coil	297-27682.001	060
L503	Spule	Coil	297-27564.001	060
L523	Spule	Coil	297-27552.001	060
L543	Spule	Coil	297-27548.001	060
L546	Spule	Coil	297-27559.001	060
L701	Dr. 0U68 K 0305RA-R68K TDK	Choke	298-27591.020	060
816	Spule	Coil	297-27743	060
L831	Dr. 6U8 J EL0305RA-6R8J TDK	Choke	298-27588.020	060
P821	Potentiometer 10K 6mm Kohleschicht hor.	Potentiometer	375-27744	060
Q210	Transistor BF1100WR SOT343	Transistor	344-27268	060
Q310	Transistor BF1100WR SOT343	Transistor	344-27268	060

Tuner/ZF, US Tuner/IF 87346.050

Pos.Nr. Item N°.	Bestell-Bezeichnung	Description List Part N°.	Bestell-Nr.	Var. Var.
Q410	Transistor BF1100WR SOT343	Transistor	344-27268	060
Q836	Transistor BC847B SOT23	Transistor	344-14974	060
Q853	Transistor BC847BW SOT323	Transistor	344-27272	060
W100	Koax-Buchse	Socket	323-27599	060
W200	Kontaktleiste 6-pol. STLIN-1470ATT-006/11	Contakt Ledge	326-27320.016	060
W800	Kontaktleiste 5-pol. STLIN-1470ATT-005/9	Contakt Ledge	326-27320.015	060
X751	Filter OFW K 9463-M	Filter	290-25323.Y20	060
X771	Filter OFW K 9461-M	Filter	290-25216.Y20	060
X831	Piezo Filter	Ceramic Filter	386-27630.020	060
X832	Piezo Filter 4,5 MHz	Ceramic Filter	386-27305.020	060

DIS-Modul DIS Module Art.-Nr. 88804.050

Pos.Nr. ItemN°.	Bestell-Bezeichnung	Description	Bestell-Nr. List Part N°.	Var. Var.
	INTEGR. SCHALTUNGEN	**INTEGRATED CIRCUITS**		
I21	UDA1355H/N2 QFP44	Integrated Circuit	350-31010	050
	QUARZE/FILTER	**QUARTZES**		
X38	12,28800 MHz HC49U4 CL=12pF	Crystal Oscillator	385-29837	050
	SMD TEILE	**SMD PARTS**		
Q14	BC847BW SOT323	Transistor	344-27272	050
Q82	BC847BW SOT323	Transistor	344-27272	050
Q87	BC847BW SOT323	Transistor	344-27272	050
Q93	BC847BW SOT323	Transistor	344-27272	050

Baß-Endstufe Bass Power Amp. 88493.061

Pos.Nr. Item N°.	Bestell-Bezeichnung	Description List Part N°.	Bestell-Nr.	Var. Var.
	ALLGEM. MECHAN. TEILE	**COMMON MECHANICAL PARTS**		
30	Linsenschraube AM 3x10 brüniert	Screw	432-74571	061
A9171	Strangkühlkörper mit TDA8926	Screening	509-30767.050	061
	INTEGR. SCHALTUNGEN	**INTEGRATED CIRCUITS**		
10	TDA8926 SOT243-1 Audio-Endstufe	Integrated Circuit	349-29945	061
I9151	ICMOS TDA8929T SO24 Controller	Integrated Circuit	350-29946	061
	SMD TEILE	**SMD PARTS**		
D9156	DIOZD 5V6 J 0W25 SOD323	Diode	351-31054	061
D9177	DIOZD 8V2 G 0W5 SOD-80C BZV55B	Diode	351-21413	061
Q9151	BC857BW SOT323	Transistor	344-28404	061
Q9153	BC847BW SOT323	Transistor	344-27272	061

Pos.Nr. Item N°.	Bestell-Bezeichnung	Description List Part N°.	Bestell-Nr.	Var. Var.
	SPULEN/LAUTSPRECHER	**COILS,SPEAKERS**		
L8101	Relay 5V0 62R 16A 1-pol.	Relay	387-29279	050
L8101	Relay 5V0 62R 16A 1-pol. 29x16x13	Relay	387-29279	051
T8101	Trafo Standby Q2500 EF16-4,7	Power Transformer	490-29284	050
T8101	Trafo Standby Q2500 EF16-4,7	Power Transformer	490-29284	051
	ALLGEM. MECHAN. TEILE	**COMMON MECHANICAL PARTS**		
H8207	684 Halter/Diode vorm.	Holder	602-84535.052	050
H8207	554 Halter/Diode vorm.	Holder	602-84535.055	051
	INTEGR. SCHALTUNGEN	**INTEGRATED CIRCUITS**		
I8123	TL 431ACLP	Integrated Circuit	349-19817.020	050
I8123	TL 431ACLP	Integrated Circuit	349-19817.020	051
I8131	VIPER12# SO8 CHARGE	Integrated Circuit	350-29281	050
I8131	VIPER12# SO8 CHARGE	Integrated Circuit	350-29281	051
I8216	IR-Empfänger (2-Farbstreifen)	Coupler	353-27396.Y20	050
I8216	IR-Empfänger (2-Farbstreifen)	Coupler	353-27396.Y20	051
	BUCHSEN/FASSUNGEN	**SOCKETS**		
W8321	Kombibuchse 6,5mm	Socket	323-27415	051
W8321	Kombibuchse 6,5mm	Socket	323-27415	053
W8321	Kombibuchse	Socket	323-28586	050
	DIODEN	**DIODES**		
D8133	Gleichrichter DF 08 S	Rectifier	354-25837	050
D8133	Gleichrichter DF 08 S	Rectifier	354-25837	051
D8206	LED 3mm rot low current	Coupler	353-22140	050
D8206	LED 3mm rot low current	Coupler	353-22140	051
D8207	LED 3mm grün low current	Coupler	353-22141	050
D8207	LED 3mm grün low current	Coupler	353-22141	051
I8122	Opto-Koppler DIP4 80V 50/80mA	Coupler	353-28638	050
I8122	Opto-Koppler DIP4 80V 50/80mA	Coupler	353-28638	051
	SCHALTER	**SWITCHES**		
S8101	Netzschalter 8013 LORL	Switch	471-25599	
S8201	Taster (lang)	Switch	467-28135	
S8202	Taster (lang)	Switch	467-28135	
S8203	Taster (lang)	Switch	467-28135	
	SICHERUNGEN	**FUSES**		
F8133	Sich. 630mA T 250V 8x8	Fuse	380-13837.020	050
F8133	Sich. 630mA T 250V 8x8	Fuse	380-13837.020	051
	KONDENSATOREN	**CAPACITORS**		
C8133	Elko 4U7 M 400V	Electrolytic Capacitor	360-29280.020	050
C8133	Elko 4U7 M 400V	Electrolytic Capacitor	360-29280.020	051
	SMD TEILE	**SMD PARTS**		
D8106	0,2A 75V SOD80 LL4148	Diode	351-15015	050
D8106	0,2A 75V SOD80 LL4148	Diode	351-15015	051
D8111	0,2A 75V SOD80 LL4148	Diode	351-15015	050
D8111	0,2A 75V SOD80 LL4148	Diode	351-15015	051
D8111	BAS316 SOD323	Diode	351-27952	053
D8112	0,2A 75V SOD80 LL4148	Diode	351-15015	050
D8112	0,2A 75V SOD80 LL4148	Diode	351-15015	051
D8112	BAS316 SOD323	Diode	351-27952	053
D8114	0,2A 75V SOD80 LL4148	Diode	351-15015	050
D8114	0,2A 75V SOD80 LL4148	Diode	351-15015	051
D8121	1,0A 200V DO214AC FAST-GP	Diode	351-25539	051
D8121	1,0A 200V DO214AC FAST-GP	Diode	351-29831	050

Bedienteil Control Unit 88226.050-050, 053

Pos.Nr. Item N°.	Bestell-Bezeichnung	Description List Part N°.	Bestell-Nr.	Var. Var.
	SMD TEILE	**SMD PARTS**		
D8131	0,2A 75V SOD80 LL4148	Diode	351-15015	050
D8131	0,2A 75V SOD80 LL4148	Diode	351-15015	051
D8138	0,2A 75V SOD80 LL4148	Diode	351-15015	050
D8138	0,2A 75V SOD80 LL4148	Diode	351-15015	051
D8201	DIOZD 12V0 J 0W5 SOD-80 ZMM12	Diode	351-17532	050
D8201	DIOZD 12V0 J 0W5 SOD-80 ZMM12	Diode	351-17532	051
D8202	DIOZD 12V0 J 0W5 SOD-80 ZMM12	Diode	351-17532	050
D8202	DIOZD 12V0 J 0W5 SOD-80 ZMM12	Diode	351-17532	051
D8204	DIOZD 12V0 J 0W5 SOD-80 ZMM12	Diode	351-17532	050
D8204	DIOZD 12V0 J 0W5 SOD-80 ZMM12	Diode	351-17532	051
D8331	DIOZD 12V0 J 0W5 SOD-80 ZMM12	Diode	351-17532	050
D8331	DIOZD 12V0 J 0W5 SOD-80 ZMM12	Diode	351-17532	051
D8336	DIOZD 12V0 J 0W5 SOD-80 ZMM12	Diode	351-17532	050
D8336	DIOZD 12V0 J 0W5 SOD-80 ZMM12	Diode	351-17532	051
D8391	0,2A 75V SOD80 LL4148	Diode	351-15015	050
D8391	0,2A 75V SOD80 LL4148	Diode	351-15015	051
D8391	BAS316 SOD323	Diode	351-27952	053
D8392	0,2A 75V SOD80 LL4148	Diode	351-15015	050
D8392	0,2A 75V SOD80 LL4148	Diode	351-15015	051
D8392	BAS316 SOD323	Diode	351-27952	053
D8491	0,2A 75V SOD80 LL4148	Diode	351-15015	050
D8491	0,2A 75V SOD80 LL4148	Diode	351-15015	051
D8491	BAS316 SOD323	Diode	351-27952	053
D8492	0,2A 75V SOD80 LL4148	Diode	351-15015	050
D8492	0,2A 75V SOD80 LL4148	Diode	351-15015	051
D8492	BAS316 SOD323	Diode	351-27952	053
Q8111	BC847BW SOT323	Transistor	344-27272	050
Q8111	BC847BW SOT323	Transistor	344-27272	051
Q8114	BC847BW SOT323	Transistor	344-27272	050
Q8114	BC847BW SOT323	Transistor	344-27272	051
Q8202	BC847BW SOT323	Transistor	344-27272	050
Q8202	BC847BW SOT323	Transistor	344-27272	051

Bedienteil Control Unit 88668.051

Pos.Nr. Item N°.	Bestell-Bezeichnung	Description List Part N°.	Bestell-Nr.	Var. Var.
	BUCHSEN/FASSUNGEN	**SOCKETS**		
W8002	Kombibuchse 6,5mm	Socket	323-27415	051
	SCHALTER	**SWITCHES**		
S8101	Netzschalter 8013 LORL	Switch	471-25599	051
S8201	Taster (lang) 6,2x6,2mm Horiz.	Switch	467-28135	051
S8202	Taster (lang) 6,2x6,2mm Horiz.	Switch	467-28135	051
S8203	Taster (lang) 6,2x6,2mm Horiz.	Switch	467-28135	051
	SMD TEILE	**SMD PARTS**		
D8111	BAS316 SOD323	Diode	351-27952	051
D8112	BAS316 SOD323	Diode	351-27952	051
D8391	BAS316 SOD323	Diode	351-27952	051
D8392	BAS316 SOD323	Diode	351-27952	051
D8491	BAS316 SOD323	Diode	351-27952	051
D8492	BAS316 SOD323	Diode	351-27952	051

DVI Extension 88682.050

Pos.Nr. Item N°.	Bestell-Bezeichnung	Description List Part N°.	Bestell-Nr.	Var. Var.
	INTEGR. SCHALTUNGEN	**INTEGRATED CIRCUITS**		
I5131	ICMOS LTC1778 SSOP16	Integrated Circuit	350-30891	050
I5151	ICMOS LTC1778 SSOP16	Integrated Circuit	350-30891	050
I5171	ICMOS LTC1778 SSOP16	Integrated Circuit	350-30891	050
I5201	ICMOS SII169 TQFP100 Receiver HDCP	Integrated Circuit	350-31230	050
I5202	ICMOS 74LVC1G04 SOT353 Inverter	Integrated Circuit	350-30912	050
I5271	ICMOS PCF8574 SSOP20	Integrated Circuit	350-28688	050
I5331	82B715 SO8 BUS-Buffer-I2C	Integrated Circuit	350-31241	050
I5336	74 AC 04 SO14	Integrated Circuit	350-16393	050
I5346	LM 2903D SO08	Integrated Circuit	350-21674	050
I5356	ICMOS 74LVC14APW TSSOP14	Integrated Circuit	350-28748	050
I5361	LM 2902-M	Integrated Circuit	350-19705	050
	BUCHSEN/FASSUNGEN	**SOCKETS**		
W5110	Systembuchse DVI 900	Socket	323-29455	050
	WIDERSTÄNDE	**RESISTORS**		
R5221	Wid.-Array 4x22R J 4x0603	Resistor	374-30936	050
R5222	Wid.-Array 4x22R J 4x0603	Resistor	374-30936	050
R5223	Wid.-Array 4x22R J 4x0603	Resistor	374-30936	050
R5224	Wid.-Array 4x22R J 4x0603	Resistor	374-30936	050
R5226	Wid.-Array 4x22R J 4x0603	Resistor	374-30936	050
R5227	Wid.-Array 4x22R J 4x0603	Resistor	374-30936	050
	SMD TEILE	**SMD PARTS**		
D5114	DIOZD 5V6 J 0W25 SOD323	Diode	351-31054	050
D5142	LL 103 C	Diode	351-16947	050
D5147	1,0A 800V DO214AC FAST-GP	Diode	351-25542	050
D5162	LL 103 C	Diode	351-16947	050
D5167	1,0A 800V DO214AC FAST-GP	Diode	351-25542	050
D5182	LL 103 C	Diode	351-16947	050
D5187	1,0A 800V DO214AC FAST-GP	Diode	351-25542	050
D5261	BAS316 SOD323	Diode	351-27952	050
D5262	BAS316 SOD323	Diode	351-27952	050
D5263	BAS316 SOD323	Diode	351-27952	050
D5376	BAS316 SOD323	Diode	351-27952	050
D5382	BAS316 SOD323	Diode	351-27952	050
D5383	BAS316 SOD323	Diode	351-27952	050
D5392	BAS316 SOD323	Diode	351-27952	050
Q5116	BC847BW SOT323	Transistor	344-27272	050
Q5117	BC847BW SOT323	Transistor	344-27272	050
Q5118	BC847BW SOT323	Transistor	344-27272	050
Q5146	BSO4822 SO-8 N-CH MOSFET	Transistor	344-31480	050
Q5147	BSO4822 SO-8 N-CH MOSFET	Transistor	344-31480	050
Q5166	FDS8936A SO8 6A 30V DUAL-N-CH	Transistor	344-30892	050
Q5186	BSO4420 SO-8 N-CH MOSFET	Transistor	344-31478	050
Q5187	BSO4420 SO-8 N-CH MOSFET	Transistor	344-31478	050
Q5261	BC847B SOT23	Transistor	344-14974	050
Q5310	SN7002 SOT23 0A19 60V NCH	Transistor	344-29134	050
Q5311	SN7002 SOT23 0A19 60V NCH	Transistor	344-29134	050
Q5372	BC847BW SOT323	Transistor	344-27272	050
Q5376	BC847B SOT23	Transistor	344-14974	050
Q5392	BC847B SOT23	Transistor	344-14974	050

ARS HDR 88801.001/2/050

Pos.Nr. Item N°.	Bestell-Bezeichnung	Description List Part N°.	Bestell-Nr.	Var. Var.
	BAUGRUPPEN	**UNITS**		
10	HDR vormontiert 80GB Q2550	Scaffolding Access.	291-89001.050	
20	HDR-Zusatznetzteil kpl.	P.C.B	396-88746.050	
	DRUCKSACHEN	**OPERATING INSTRUCTIONS**		
30	EBA ARS DIGITAL RECORDER PLUS Q2550	Indicating Sheet	240-31336	050
42	Codetabelle RC2	Indicating Sheet	240-31117	050
60	BAN 6-spr. DIGITAL RECORDER PLUS Q2550	Operating Instructions	233-31335	
90	BAN -D-I ACONDA 9381 HD/DR+/RC2	Operating Instructions	233-31709	050
91	BAN -NL-F ACONDA 9381 HD/DR+/RC2	Operating Instructions	233-31709.010	050
92	BAN -GB-E ACONDA 9381 HD/DR+/RC2	Operating Instructions	233-31709.020	050
	GERÄTEBEIPACK	**SET SUPPLEMENT**		
21	Halter	Holder	602-86588.001	
40	RC2 platin	Transmitter	263-89500.A00	050
41	Mikrozelle 1,5V Alkali-Mangan	Accumulator	280-13411	050
	VERPACKUNGSMATERIAL	**PACKING MATERIAL**		
45	PE-Schutzeinlage 265x480x1	Protective Packing	253-26221.001	050
50	Minigripbeutel 120x80x0,05 unbedr.	Protective Packing	253-47019	050
	GEHÄUSETEILE	**CABINET MOUNTING**		
22	Abdeckung für HDR-Zusatznetzteil	Mask	703-88875.001	
23	Filzstreifen 10x20	Felt Strip	414-25190	
70	Halter für ACONDA	Holder	602-88854.001	050
80	Abstandshalter Typ 410.06.15	Bolt	579-26173	050
90	Halter für ACONDA	Holder	602-88853.001	002
90	Halter für ACONDA	Holder	602-88853.001	050
92	Neoprenstanzteil 15x10x6 selbstklebend	Foam Plastics Ledge	411-22286.002	002
92	Neoprenstanzteil 15x10x6 selbstklebend	Foam Plastics Ledge	411-22286.002	050

HDR Netzteil HDR Power Supply 88746.050

Pos.Nr. Item N°.	Bestell-Bezeichnung	Description List Part N°.	Bestell-Nr.	Var. Var.
	SPULEN	**COILS,**		
L516	Dr. 2x5705H 4,0A Plasma	Choke	298-28263	050
T531	Trafo SMT EF 25/11	Power Transformer	490-31352	050
	INTEGR. SCHALTUNGEN	**INTEGRATED CIRCUITS**		
I551	ICMOS TDA16846 P-DSO-14-3	Integrated Circuit	350-30893	050
	TRANSISTOREN	**TRANSISTORS**		
10	STP6NA60-FI	Transistor	346-27121.Y20	050
	DIODEN	**DIODES**		
20	9A0 500V SOD113 BYV29X	Diode	352-31289	050
	SICHERUNGEN	**FUSES**		
F621	3150mA F 250V 8x8	Fuse	380-26219.020	050
	KONDENSATOREN	**CAPACITORS**		
C518	220N K 275V	Capacitor	359-28330	050
C521	150P K 1000V	Capacitor	357-31049.020	050
C526	Elko 56U00 M 450V	Electrolytic Capacitor	360-31285	050
C541	10N M 1000V	Capacitor	359-22573	050
C600	KO-Y1 1N0 M 250V	Capacitor	357-29162	050
C621	330P M 500V	Capacitor	357-16875.020	050
	WIDERSTÄNDE	**RESISTORS**		
R521	1K8 J 0207 0W5 WIDSI	Resistor	367-31444.020	050
	SMD TEILE	**SMD PARTS**		
D521	5A 1200V DPAK STTA512	Diode	351-31236	050
D536	BAS316 SOD323	Diode	351-27952	050

HDR Interface 88721.050

Pos.Nr. Item N°.	Bestell-Bezeichnung	Description List Part N°.	Bestell-Nr.	Var. Var.
	BAUGRUPPEN	**UNITS**		
10	HDR-Interface kpl. Q2550	P.C.B	396-88721.050	050
20	PVR-Modul für HDR	Scaffolding Access.	291-31141	050
40	Festplatte 80GB	Drive Mechanism	270-31135	050
	ALLGEM. MECHAN. TEILE	**COMMON MECHANICAL PARTS**		
11	Abstandbolzen (Metall) M3x12	Bolt	579-31602	050
30	Halter HDR-Modul	Holder	602-88723.001	050
43	Dämpfer für HDR	Clutch Piece	503-31446	050
	INTEGR. SCHALTUNGEN	**INTEGRATED CIRCUITS**		
I 02	L 78L05 SO8	Integrated Circuit	350-25846	050
I 03	ICMOS MSP3410 PQFP-80 SOUND	Integrated Circuit	350-29131	050
I 04	ICMOS 4,50V 20MA SO08 RESET-IC	Integrated Circuit	350-28570	050
I 05	ICMOS PCF8574 SSOP20	Integrated Circuit	350-28688	050
I 06	ICMOS LTC1778 SSOP16	Integrated Circuit	350-30891	050
I 07	L 78L08 SO8	Integrated Circuit	350-26953	050
I721	ICMOS LTC1778 SSOP16	Integrated Circuit	350-30891	050
	QUARZE/FILTER	**QUARTZES**		
X 01	Quarz 18,432000 MHz HC49U	Crystal Oscillator	385-31166	050
	SMD TEILE	**SMD PARTS**		
D 01	LL 103 C	Diode	351-16947	050
D 02	1,0A 800V DO214AC FAST-GP	Diode	351-25542	050
D 03	DIOZD 16V0 J 0W2 SOD323 BZT52	Diode	351-31337	050
D739	LL 103 C	Diode	351-16947	050
D742	1,0A 800V DO214AC FAST-GP	Diode	351-25542	050
Q 01	BC847BW SOT323	Transistor	344-27272	050
Q 02	FDS8936A SO8 6A 30V DUAL-N-CH	Transistor	344-30892	050
Q 03	SN7002 SOT23 0A19 60V NCH	Transistor	344-29134	050
Q 04	SN7002 SOT23 0A19 60V NCH	Transistor	344-29134	050
Q711	BC847BW SOT323	Transistor	344-27272	050
Q741	FDS8936A SO8 6A 30V DUAL-N-CH	Transistor	344-30892	050

AC3-Modul AC3 Module Art.-Nr. 88228.050

Pos.Nr. ItemN°.	Bestell-Bezeichnung	Description	Bestell-Nr. List Part N°.	Var. Var.
	INTEGR. SCHALTUNGEN	**INTEGRATED CIRCUITS**		
10	ICMOS OTP VSOP32 256KX8	Integrated Circuit	350-28694	050
I001	ICMOS CS4925 PLCC44	Integrated Circuit	350-28692	050
I002	ICMOS CS4226 TQFP44	Integrated Circuit	350-28693	050
I003	ICMOS 74LVC574APW TSOP20	Integrated Circuit	350-28695	050
I004	ICMOS 74LVC574APW TSOP20	Integrated Circuit	350-28695	050
I005	ICMOS OTP VSOP32 256KX8 SW V1.0	Integrated Circuit	350-28694050	050
I006	ICMOS SSM2404 SO20	Integrated Circuit	350-28699	050
I007	MC33079 SO14	Integrated Circuit	350-28701	050
I008	MC33079 SO14	Integrated Circuit	350-28701	050
I009	ICMOS HEF4053D SO16	Integrated Circuit	350-24881	050
I010	ICMOS M34063A SO008	Integrated Circuit	350-28429	050
I011	ICMOS 8575 SOT340 I/O-EXP.J2C	Integrated Circuit	350-29252	050
I012	MC33078 SO8	Integrated Circuit	350-28702	050
I013	ICMOS HCF4081B SO14	Integrated Circuit	350-28689	050
I014	ICMOS SSM2404 SO20	Integrated Circuit	350-28699	050
I015	ICMOS 74LVC125APW TSSOP14	Integrated Circuit	350-28697	050
I016	ICMOS 74LVC14APW TSSOP14	Integrated Circuit	350-28748	050
I018	NJM2234 SSOP-8 Video-Switch	Integrated Circuit	350-29253	050
	SMD TEILE	**SMD PARTS**		
D001	DIOZD 5V6 G 0W5 SOD-80 ZMM5.6	Diode	351-22580	050
D002	1,0A 800V DO214AC FAST-GP	Diode	351-25542	050
Q001	BC847BW SOT323	Transistor	344-27272	050
Q002	BC847BW SOT323	Transistor	344-27272	050
Q004	BC847BW SOT323	Transistor	344-27272	050
Q005	BC847BW SOT323	Transistor	344-27272	050
Q006	BC847BW SOT323	Transistor	344-27272	050
Q007	BC847BW SOT323	Transistor	344-27272	050
Q008	BC857BW SOT323	Transistor	344-28404	050
Q009	BC847BW SOT323	Transistor	344-27272	050
Q010	BC857BW SOT323	Transistor	344-28404	050
Q011	BC847BW SOT323	Transistor	344-27272	050

Audio Erweiterung Audio Extension Art.-Nr. 88234.050-051

Pos.Nr. Item N°.	Bestell-Bezeichnung	Description List Part N°.	Bestell-Nr.	Var. Var.
	BUCHSEN/FASSUNGEN	**SOCKETS**		
W01	Cinchbuchse 4-fach Quadrat	Socket	323-29242	050
W03	Cinchbuchsenleiste 3-fach schwarz	Socket	323-29664	

Audio Erweiterung Audio Extension 88678.050

Pos.Nr. Item N°.	Bestell-Bezeichnung	Description List Part N°.	Bestell-Nr.	Var. Var.
	BUCHSEN/FASSUNGEN	**SOCKETS**		
W01	Cinchbuchse 4-fach Quadrat mit Massepin	Socket	323-31410	050

S-Link Erweiterung S-Link Extension 88857.050-065

Pos.Nr. Item N°.	Bestell-Bezeichnung	Description List Part N°.	Bestell-Nr.	Var. Var.
	INTEGR. SCHALTUNGEN	**INTEGRATED CIRCUITS**		
I146	ICMOS SP232ACT SO16	Integrated Circuit	350-27250	060
I146	ICMOS SP232ACT SO16	Integrated Circuit	350-27250	065
	BUCHSEN/FASSUNGEN	**SOCKETS**		
W116	Mini-DIN-Buchse 9-pol. horiz. schwarz	Socket	323-31362	050
W116	Mini-DIN-Buchse 9-pol. horiz. schwarz	Socket	323-31362	065
W141	D-SUB-Buchse 9-pol.	Socket	323-31515	060
W141	D-SUB-Buchse 9-pol.	Socket	323-31515	065
	SICHERUNGEN	**FUSES**		
R116	PPTC-Sich. 0A5/1A0 60V 7D5 5R1	Thermo Fuse	381-29890.020	050
R116	PPTC-Sich. 0A5/1A0 60V 7D5 5R1	Thermo Fuse	381-29890.020	065
	SMD TEILE	**SMD PARTS**		
D144	BA 592 SOD323	Diode	351-25810	060
D144	BA 592 SOD323	Diode	351-25810	065
D147	BA 592 SOD323	Diode	351-25810	060
D147	BA 592 SOD323	Diode	351-25810	065
D154	BA 592 SOD323	Diode	351-25810	060
D154	BA 592 SOD323	Diode	351-25810	065
Q103	BC857BW SOT323	Transistor	344-28404	050
Q103	BC857BW SOT323	Transistor	344-28404	065
Q107	BC857BW SOT323	Transistor	344-28404	050
Q107	BC857BW SOT323	Transistor	344-28404	065
Q111	BC857BW SOT323	Transistor	344-28404	050
Q111	BC857BW SOT323	Transistor	344-28404	065
Q122	BC857BW SOT323	Transistor	344-28404	060
Q122	BC857BW SOT323	Transistor	344-28404	065
Q127	BC857BW SOT323	Transistor	344-28404	060
Q127	BC857BW SOT323	Transistor	344-28404	065
Q131	BC857BW SOT323	Transistor	344-28404	060
Q131	BC857BW SOT323	Transistor	344-28404	065
Q143	BC847BW SOT323	Transistor	344-27272	060
Q143	BC847BW SOT323	Transistor	344-27272	065
Q146	BSV52 SOT23	Transistor	344-16207	060
Q146	BSV52 SOT23	Transistor	344-16207	065
Q151	BC857BW SOT323	Transistor	344-28404	060
Q151	BC857BW SOT323	Transistor	344-28404	065

Fernbedienung RC2 Remote Control RC2 89500.A50 / 89510.A00

Pos.Nr. Item N°.	Bestell-Bezeichnung	Description List Part N°.	Bestell-Nr.	Var. Var.
	BAUGRUPPEN	**UNITS**		
10	Ltpl. Ferbedienung	Remote Control P.C.B.	396-88613.050	A50
10	Ltpl. Ferbedienung US	Remote Control P.C.B. US	396-88613.051	A00
	DRUCKSACHEN	**OPERATING INSTRUCTIONS**		
20	BAN-D-I DVD Preceiver AURO 8116 DT	Operating Instructions	233-31699	
20	BAN -D-I ACONDA 9381 HD/DR+/RC2	Operating Instructions	233-31709	
21	BAN-NL-F DVD Preceiver AURO 8116 DT	Operating Instructions	233-31699.010	
21	BAN -NL-F ACONDA 9381 HD/DR+/RC2	Operating Instructions	233-31709.010	
22	BAN-GB-E DVD Preceiver AURO 8116 DT	Operating Instructions	233-31699.020	
22	BAN -GB-E ACONDA 9381 HD/DR+/RC2	Operating Instructions	233-31709.020	
23	Garantie- und Service-Card AUDIO	Indicating Sheet	240-31659	
24	LOEWE Marketing-Card	Indicating Sheet	240-31294	
25	Rückumschlag Marketing-Card	Indicating Sheet	240-31298	

Fernbedienung RC2 — Remote Control RC2 — 89500.A50 / 89510.A00

Pos.Nr. Item N°.	Bestell-Bezeichnung	Description List Part N°.	Bestell-Nr.	Var. Var.
	GERÄTEBEIPACK	**SET SUPPLEMENT**		
11	Mikrozelle 1,5V Alkali-Mangan	Accumulator	280-13411	
	VERPACKUNGSMATERIAL	**PACKING MATERIAL**		
12	Kettenbeutel 85mm x 340mm Rolle	Protective Packing	253-29190	
13	Luftpolsterbeutel 45x75	Protective Packing	253-31593	
26	Klarsichtbeutel 240x320 bedr.	Protective Packing	253-28416	
30	Verpackungskarton für BAN+FB RC2	Packing Case	245-88422.004	
30	Schachtel RC2	Packing Case	245-88954.001	
32	PE-Schutzeinlage 265x480x1	Protective Packing	253-26221.001	
	GEHÄUSETEILE	**CABINET MOUNTING**		
60	Gehäuse-Oberteil kpl. platin RC2 **EU-M** (89500)	Cover	756-88696.209	A50
60	Gehäuse-Oberteil kpl. platin RC2 **USA-OTP** (89510)	Cover	756-88696.709	A00
	INTEGR. SCHALTUNGEN	**INTEGRATED CIRCUITS**		
01	ICMOS M24C02 SO8 EEPROM	Integrated Circuit	350-31084	
I 02	ICMOS S3C80F9 44-QFP V1.1 **EU-M** (89500)	Integrated Circuit	350-31040.002	A50
I 02	ICMOS S3C80F9 44-QFP V1.1 **USA-OTP** (89510)	Integrated Circuit	350-31176.002	A00
I 04	IC-VR 3V30 SOT323 TPS79733	Integrated Circuit	350-31282	
	DIODEN	**DIODES**		
D 03	LED F.D.SFH 4515	Coupler	353-27024	
D 04	LED F.D.SFH 4515	Coupler	353-27024	
	GEBER-ERSATZTEILE	**SPARE PARTS FOR TRANSMITTER**		
30	Display CONTROL RC2	Coupler	353-88649.001	
35	Lichtleiter RC2	Window	666-88685.001	
50	Kontaktmatte RC2	Spring Contact	309-88688.001	
51	Taste Multiwayswitch platin RC2/RC3	Button	682-88693.009	
61	EJOT-PT-Schraube K25x6 Torx	Screw	440-31456	
70	Gehäuse-Unterteil platin RC2	Cover	756-88695.009	
75	Batteriefeder 2-fach	Spring	739-85279.001	
80	Batteriedeckel platin RC2/RC3	Cover	756-88687.009	
C 04	Elko 4U7 M 16V SMD	Electrolytic Capacitor	362-28918	
D 02	LED Mini-TOPLED SMD LS M676 rot	Coupler	353-31115	
D 08	LED Mini-TOPLED SMD LS M676 rot	Coupler	353-31115	
H 23	Batteriefeder 1-fach	Spring	739-85278.001	
IQ 09	BC857BW SOT323	Transistor	344-28404	
S 02	Joystick SMD 4-Dir.	Keyboard	466-31092	
W 01	SMD-Kontaktfeder RC2	Batt. Cont. Spring	729-31463	
W 03	Batteriefeder vergoldet	Spring	739-87217.002	
W 04	Batteriefeder vergoldet	Spring	739-87217.002	
W 07	Batteriefeder vergoldet	Spring	739-87217.002	
W 20	Foliensteckverb. 28-pol. 0R5	Contact Ledge	326-29383	
X 03	Reson. 8,000000 MHz SMD mit Kond.	Ceramic Filter	386-29927	
	SMD TEILE	**SMD PARTS**		
Q 02	FMMT717 SOT23	Transistor	344-27372	
Q 04	BC847BW SOT323	Transistor	344-27272	
Q 06	BC847BW SOT323	Transistor	344-27272	
Q 07	BC857BW SOT323	Transistor	344-28404	
Q 10	BC847BW SOT323	Transistor	344-27272	

Loewe-Vertragswerkstätten • Loewe establishments

Berlin
VHF
Steglitzer Damm 39
12169 **Berlin**
Tel. 0 30 / 21 33 006
Fax 0 30 / 21 33 007
loewe.vertragskundendienst.berlin@arcor.de

Hamburg
Michael Hinz
Audio-Video-TV-Service
Antonie-Möbis-Weg 5
22523 **Hamburg**
Tel. 0 40 / 57 08 010
Fax 0 40 / 57 08 017
Hinz@Hinz-GmbH.de

Niedersachsen
Hütsche & Stelter GbR
Lüneburger Str. 27
21335 **Lüneburg**
Tel. 041 31 / 85 58 83
Fax 041 31 / 85 58 84
videlse@compuserve.de

Niedersachsen
Wolfgang Schütte GmbH
TV-HiFi-Meisterwerkstatt
Bernhardstr. 36
26122 **Oldenburg**
Tel. 04 41 / 50 20 35
Fax 04 41 / 50 84 87
Service-Center@t-online.de

Niedersachsen
DW-Service GmbH
Haltenhoffstraße 52-54
30167 **Hannover**
Tel. 05 11 / 714 073
Fax 05 11 / 700 09 97
Doering@DW-Service.com

Nordrhein-Westfalen
TSW-Techn. Service Wenzel
Klingenbergerstraße 38-40
32756 **Detmold**
Tel. 052 31 / 39 513
Fax 052 31 / 39 613
mail@TSW-online.de

Nordrhein-Westfalen
Jürgen Wolber
Electronic - Service
Weißenburgerstraße 52
40476 **Düsseldorf**
Tel. 02 11 / 443 456
Fax 02 11 / 464 433
Wolber@arcormail.de

Nordrhein-Westfalen
HVS Lösbar GmbH
Hauert 16
44227 **Dortmund**
Tel. 02 31 / 97 53 333
Fax 02 31 / 97 53 33 50
info@Loesbar.de

Nordrhein-Westfalen
SSC Kirchhoff GmbH
Am Förderturm 9
44575 **Castrop-Rauxel**
Tel. 023 05 / 97 740
Fax 023 05 / 97 74 99
info@SSC-kirchhoff.de

Nordrhein-Westfalen
Elektronik-Service Wenzel
Mielenforsterstraße 2
51069 **Köln**
Tel. 02 21 / 68 01 585
Fax 02 21 / 68 01 588
ESW-Elektronik@t-online.de

Rheinland-Pfalz
Hans Krempl / Haustechnik GmbH
August-Horch-Straße 14
56070 **Koblenz**
Tel. 02 61 / 89 09-0
Fax 02 61 / 83 074
Rainer.Hartenfels@Krempl.de

Rheinland-Pfalz
L. Weisenstein GmbH
Ludwig Strauss Straße 1
67098 **Bad Dürkheim**
Tel. 063 22 / 95 080
Fax 063 22 / 95 08 19
Weisenstein_GmbH@t-online.de

Hessen
Fernseh-Kessler
Veckerhagener Straße 58
34233 **Fuldatal**
Tel. 05 61 / 81 30 01, 81 30 02, 81 30 03
Fax 05 61 / 81 91 85
info@Fernseh-Kessler.de

Hessen
Schwalbe GmbH
Max-Planck-Str. 20
63303 **Dreieich**
Tel.(0 61 03) 39 99 80
Tel.(0 61 03) 39 99 79
Schwalbe-@t-online.de

Hessen
VAD Video- und Audio-Dienst
Ostring 7
65205 **Wiesbaden-Nordenstadt**
Tel. 061 22 / 90 91 80
Fax 061 22 / 90 91 50
Loewe@Hemmerling-Service.de

Hessen
Schwalbe GmbH
Max-Plank-Straße 20
34233 Fuldatal
Tel. 061 03 / 39 99 80
Fax 061 03 / 39 99 79

Baden-Württemberg
AV-Technik Wagner Zerweck GmbH
Hofener Straße 140a
70374 **Stuttgart**
Tel. 071 11 / 78 00 423
Fax 071 11 / 78 00 426
07117800423-0001@t-online.de

Baden-Württemberg
Pavlek Service-Center
Rilkestraße 5
71229 **Leonberg**
Tel. 071 52 / 90 51 16+17
Fax 071 52 / 90 51 18
Loewe@Pavlek.de

Baden-Württemberg
Autronic Electronic-Service GmbH
Greschbachstraße 29
76229 **Karlsruhe**
Tel. 07 21 / 62 99 132
Fax 07 21 / 62 99 195
emanuel.werner@autronic-service.de

Baden-Württemberg
CES Consumer-Electronic-Service GmbH
Königsberger Straße 12
78628 **Rottweil**
Tel. 07 41 / 24 90
Fax 07 41 / 24 92 79
Dreher.CES@gmx.de

Bayern
Jürgen Drössler Fernseh-Video-Service
Lerchenstraße 8
80995 **München**
Tel. 0 89 / 35 71 68 31
Fax 0 89 / 35 71 68 38
JuergenDroessler@freenet.de

Mecklenburg-Vorpommern
TV-Hifi-Video-SAT-Elektronik
Inh. Wolfgang Schubert
Lange Reihe 38b
17121 **Loitz**
Tel. 03 99 98 / 10 577
Fax 03 99 98 / 10 566
TV_Schubert@t-online.de

Mecklenburg-Vorpommern
Wilhelm Meissner GmbH
Dorfstraße 1
18107 **Lichtenhagen-Dorf**
Tel. 03 81 / 76 000 62
Fax 03 81 / 76 000 63
Service@EP-Meissner.com

Mecklenburg-Vorpommern
Service-Center Baumeister
Neue Reihe 14
18190 **Sanitz**
Tel. 03 82 09 / 81 950
Fax 03 82 09 / 81 951
SCB@SCBaumeister.de

Mecklenburg-Vorpommern
Elektro Blitz Gmbh & Co.KG
Lessingstraße 31
19059 **Schwerin**
Tel. 03 85 / 75 82 080
Fax 03 85 / 75 82 08 50
Service@EP-Elektro-Blitz.de

Brandenburg
Wolfgang Ihlefeldt
Berliner Str. 8
14532 **Güterfelde**
Tel. 033 29 / 62 192
Fax 033 29 / 62 296
Wihlefeldt@t-online.de

Sachsen-Anhalt
Schwanbeck & Gall GmbH
Weißenfelser Straße 1
06712 **Zeitz**
Tel. 034 41 / 86 210
Fax 034 41 / 86 211
Schwanbeck-Gall@t-online.de

Sachsen-Anhalt
Service-Partner Völkel
Carnotstraße 27
39120 **Magdeburg**
Tel. 03 91 / 62 87 777
Fax 03 91 / 62 87 779
SPVoelkel@debitel.net

Sachsen
SMV Elektronik Service GmbH
Hofmühlenstraße 25
01239 **Dresden**
Tel. 03 51 / 28 16 016
Fax 03 51 / 28 16 017
SMV-dd@t-online.de

Ing. Günter Schröter
Zielona-Gora-Str. 21
Sachsen
03050 **Cottbus**
Tel. 03 55 / 52 30 28
Fax 03 55 / 54 22 06
GS.Elektronik-Service@t-online.de

Sachsen
HVS Lösbar GmbH
Landsberger Straße 23
04157 **Leipzig**
Tel. 03 41 / 91 26 070
Fax 03 41 / 91 26 071
Leipzig@loesbar.de

Sachsen
Semmler GmbH
Schulstraße 36
09337 **Hohenstein-Ernstthal**
Tel. 037 23 / 65 200
Fax 037 23 / 65 20 28
Semmler-multimedia@t-online.de

Thüringen
Gärtner-Elektronik-GmbH & Co.KG
Saalbahnhofstraße 21
07743 **Jena**
Tel. 0 36 41 / 40 840
Fax 036 41 / 40 84 29
0364140840@t-online.de

Thüringen
Audio-Video-Elektrik-Service GmbH
Lange Brücke 35
99084 **Erfurt**
Tel. 03 61 / 56 26 285
Fax 03 61 / 64 30 871
au-vi-el-erfurt@t-online.de

Loewe-Service und Logistik

LOEWE OPTA GmbH
Service + Logistik
Zentrale Kronach
96305 Kronach • Postfach 1554
96317 Kronach • Industriestraße 11

Die wichtigsten Rufnummern der Zentrale Kronach:
The most important phone numbers of the Kronach headquarters

	Telefon:	FAX
Ersatzteilbestellungen:	(0180) 522 1800	(0180) 522 1806
Status von Reparaturen:	(0180) 522 1805	(0 92 61) 99 412
Support Farbfernsehen:	(0180) 522 1801	(0 92 61) 99 730
Support Video/Camcorder	(0180) 522 1802	(0 92 61) 99 730
Support Telefone/Telekom.	(0180) 522 1803	(0 92 61) 99 730
Support HiFi:	(0180) 522 1804	(0 92 61) 99 730
Support Home MultiMedia	(0180) 522 1807	(0 92 61) 99 730

Hinweis! *Ersatzteilbestellung nur über Service + Logistik / Zentrale 96317 Kronach*
Note! *Spare parts orders only through Service + Logistics / Headquarters in Kronach*

Loewe Service
Übersee • Overseas

Australien
International Dynamics
Australasia PTY LTD
129 Palmer Street
AUS -**Richmond** 3121, Victoria
Tel. 00 61 / 3 - 94 29 08 22
Fax 00 61 / 3 - 94 29 08 33
aencel@internationaldynamics.com.au
mthorntonsmith@internationaldynamics.com.au

Französisch Polynesien
Sonexport
P.O. Box 2334
Avenue Prince Hinoi
98713 **Papeete** - Tahiti
French Polynesia
Tel. 00 689 / 50 66 50
Fax 00 689 / 50 66 55
sonex@mail.pf

Hong Kong
Audio Supplies Company
5/F., St George's Building
2 Ice House Street
Cental, Hong Kong
Tel. 00 852 / 25 24 - 93 77
Fax 00 852 / 28 10 - 04 06
akung@audiosupplies.com.hk

Indien
BPL Limited
17th KM, Old Madras Road
Avalahalli
IND - **Banalore** 560 049
Tel. 00 91 / 80 84 72 966
Fax 00 91 / 80 84 72 242
alok.sen@hotmail.com

Israel
RIF LTD
29, Izhak Sade Street
IRS - **Tel Aviv** 67213
Tel. 00 972 / 3 62 40 555
Fax 00 972 / 3 62 40 303
loewe@bezeqint.net

Kanada
Evolution Audio Video Inc.
250 The Espla nade
Suite 302
Toronto, Ontario M5A 1J2
Tel. 00 1 / 416-603-9090
Fax 00 1 / 416-603-9083
rbdobson@sympatico.ca

Korea
CIS Corporation
3rd Fl. Jijin Bldg. 80-3
Cheongdam-Dong
Kangnam-Ku, 135-100
Seoul, Korea
Tel. 02 3446 35 11
Fax 02 3446 35 15
hjkim@csico.co.kr

Kuwait
Naser Mohd. Al-Sayer
Electronics Co W.L.L.
P.O. Box 522
KTW - **Safat** 13006
Tel. 00 9 65 / 4 73 73 99
Fax 00 9 65 / 4 72 08 62

Libanon
Obergi Audiovise S.A.L.
Dora high-way, sea side Obegi Bldg.
B.P. 11-2652
RL - **Beyrouth**
Tel. 00 9 61 / 1 90 07 71
Fax 00 9 61 / 1 90 07 74
obegi.audiovise@tmi.com.lb

Saudi Arabien
Salem Agenscies & Services Co.
P.O. Box 9720
SA - **Jeddah** 21413
Tel. 00 9 66 / 2 - 6 65 46 16
Fax 00 9 66 / 2 6 60 78 64

Singapur
Atlas Hi-Fi PTE LTD
03-19/21 Plaza Singapura
68 Orchard Road
Singapore 238839
Tel. (65) 339 0966
Fax (65) 336 4678
miketien@atlas-hifi.com

Südafrika
The Soundlab (PTY) LTD
P.O. Box 757
Parklands 2121
Republik of South Africa
Tel. 0027 / 11 - 447 65 75
Fax 0027 / 11 - 447 66 62
loewe@mad.co.za

Vereinigte Staaten
Loewe Opta, Inc.
10 Cordage Park Circle
Suite No. 213
Plymouth, Mass. 02360
Tel. 001-508 / 830 0025
Fax 001-508 / 830 9414
ksullivan@loeweus.com
pfredrickson@loeweus.com
thoefer@loe weus.com
jbrosnan@loeweus.com
www.loewe.us.com

Zypern
L & M Eu Eurappliances LTD
Kennedy Avenue 1 A & B
P. O. Box 23426
CY - **Nicosia**
Tel. 00 3 57 / 22 - 42 05 10
Fax 00 3 57 / 22 - 42 87 70
eurappliances@spidernet.com.cy
liveras@spidernet.com.cy

Loewe Service / Europa • Europe

Benelux
Loewe Opta Benelux NV / SA
Uilenbaan 84
B - 2140 **Antwerpen**
Tel. 00 32 / 3-2 70 99 30
Fax 00 32 / 3-2 71 01 08
loewe@loewe.be
Tel. 00 30 / 2 80 33 94
Fax 00 32 / 32 71 01 08

Bulgarien
Magnum-D LTD
31, Alabin Str.
BG - 1000 **Sofia**
Tel. 00 359 / 98 367 121
Fax 00 359 / 29 631 606
daraluck7@yahoo.com

Dänemark
Turku TV Operation LTD Denmark
Roskildevej 342 G
DK - 2630 **Taastrup**
Tel. 00 45 / 43 59 77 77
Fax 00 45 / 43 59 77 00
morten.petersen@turkutv.dk

Estland
Tedra Trading Oy
Kuusemetsa 3
Saue 76506
Estland
Tel. 00 372 / 50 14 817
Fax 00 372 / 67 09 911
tetra@online.de

Frankreich
Sorep Import S.A.
11 rue de la Durance
BP 954
F - 67029 **Strasbourg** Cédex 1
Tel. 00 33 / 3 - 88 79 72 50
Fax 00 33 / 3 - 88 79 72 59
loewe.sorep@wanadoo.fr

Griechenland
Sound Hellas S.A.
Kleanthous Str. 10
GR - 54642 **Thessaloniki**
Tel. 00 30 / 31 - 856 100 o.856 200
Fax 00 30 / 31 - 856 300
sound@spark.net.gr

Grossbritannien
Linn Products Limited
P.O. Box 8465
Prestwick
UK - KA 7 2YF
Tel. 00 44 / 12 92 - 47 15 57
Fax 00 44 /12 92 - 47 15 54
helpline@linn.co.uk
stuart.withe@loewetv.co.uk

GUS
Geschl. Aktiengesellschaft der Finanz-
und Industrie-Gruppe Kreml
Zweigniederlassung Berlin
Friedrichstr. 200
10117 **Berlin**
Tel. 0 30 / 22 33 38 88
Fax 0 30 / 22 33 38 89
kreml@checkpoint-charlie.de
Büro Moskau:
Petrovsky per., d. 5, str. 2of. 10
RUS - 103031 **Moscow**
Tel. 095 / 929 99 28 oder 929 99 31
Fax 095 / 921 64 07
loewerus@online.ru

Italien
General Trading Trust SPA
Via Vittorio Emanuele, 33
I - 50041 **Calenzano** (FI)
Tel. 00 39 / 055 88 81 51
Fax 00 39 / 055 88 81 54 3
gttitaly@gttitaly.com

Island
Braedurnir Ormsson HF
Lagmula, 8
128 **Reykjavik, Iceland**
Tel. 00 354 - 5 - 302 800 oder 302 825
Fax 00 354 - 5 - 302 810
andres@ormsson.is

Kroatien
Audio Tim Export-Import
Heinzelova 50
CR - 10 000 **Zagreb**
Tel. 00 385 / 1 46 60 293
Fax 00 385 / 1 46 62 517
audio-tim@audio-tim.hr

Lettland
Elcor
37, Kr. Valdemara str.
Riga, Latvia, LV-1010
Tel. 00 371 / 7 070 707
Fax 00 371 / 7 070 22
zinkin@elcor.lv
domotehnika@elcor.lv

Litauen
Leotekus Uab
Vilniaus 12
LT - 2001 **Vilnius**
Tel. 00370 - 523 12 917
Fax 00370 - 523 12 804
mailto:info@loewe.lt
http://www.loewe.lt/

Malta
Mirage Holdings LTD
Flamingo Complex
Cannon Road
M - **Qormi**
Tel. 00 3 56 21 / 49 71 82 / 3
Fax 00 3 56 21 / 44 59 83

Mazedonien
D. T. Kodi
Cedomir Kantargiev 21 a
91 000 **Skopje**
Macedonia
Tel. 00 389 / 2 31 33 104
Fax 00 389 / 2 32 38 922
nikola@alternet.sk
itasevski@kodi.com.mk

Norwegen
CableCom AS
Ostre Kullerod 5
N - 3241 **Sandefjord**
Tel. 00 47 / 33 - 48 33 48
Fax. 00 47 / 33 - 44 60 44
roy@cablecom.no

Österreich
Robert Bosch AG
Postfach 146
A - 1011 **Wien**
Tel. 00 43 / 1 - 797 224 500
Fax 00 43 / 1 - 797 224 499
andreas.stolar@at.bosch.com

Polen
DSV Trading SA
Chrzanowskiego 10
80-278 **Gdansk**
Tel. 0048 58 / 341 00 14
Fax 0048 58 / 341 27 89
market@dsv.com.pl

Norwegen
CableCom AS
Bekkevn, 9
N - 3218 **Sandefjord**
Tel. 00 47 / 33 - 48 33 48
Fax. 00 47 / 33 - 48 33 33
roy@cablecom.no

Österreich
Robert Bosch AG
Postfach 146
A - 1011 **Wien**
Tel. 00 43 / 1 - 797 224 500
Fax 00 43 / 1 - 797 224 499
gerhard.risser@at.bosch.com

Österreich
Pirngruber
Elektronik Service & Vertriebsges. m.b.H.
Dauphinestr. 226
A - 4030 **Linz**
Tel. 00 43 / 07 32 - 38 72 82-0
Fax 00 43 / 07 32 - 38 72 82-20

Polen
PPHU PAROS Sp. zo.o.
ul. Ustronie 1-3
PL - 50-302 **Wroclaw**
Tel. 00 48 / 71 - 3 222 014 od. 017
Fax 00 48 / 71 - 322 10 61
j.pasieczny@paros.com.pl

Portugal
Videoacustica
Comercio e Representacoes de
Equipamentos Electronicos S.A.
Estrada Circunvalacao
Quinto do Paizinho, Arm 5
P - 2795-632 **Carnaxide**
Tel. 00 3 51 / 21 - 4 24 17 70
Fax 00 3 51 / 21 - 4 18 80 93
office@videoacustica.pt

Schweden
Canseda AB
Amalia Jönssons Gata 19
SE - 421 31 **Västra Frölunda**
Tel. 00 46 / 31 - 709 37 60
Fax 00 46 / 31 - 476 515
info@canseda.se

Schweiz
Telion AG
Rütistrasse 26
CH - 8952 **Schlieren**
Tel. 00 41 / 1 - 7 32 15 11
Fax 00 41 / 1 - 7 30 15 02
lgelpke@telion.ch

Slowakei
Basys Czech & Slovak S.R.O.
Trnavská cesta 84
SK - 821 02 **Bratislava**
Tel. 00 421 / 2 44 45 57 90
Fax 00 421 / 2 44 45 57 92
lelovsky@basys.sk
partl@basys.sk

Slowenien
Jadran Trgovsko Podjetje
Partizanska cesta 69
SL - 6210 **Sežana**
Tel. 00 3 86 / 57 - 31 04 40
Fax. 00 3 86 / 57 - 31 04 42
maks.puhar@jadran.si

Spanien & Kanarische Inseln
Gaplasa S.A.
Conde de Torroja,25
E - 28022 **Madrid**
Tel. 00 349 / 1 - 7 48 29 60
Fax 00 349 / 1 - 3 29 16 75
loewe@maygap.com

Tschechische Republik
K + B Expert Spol. SR. O.
U. Expertu 91
CZ - 2 50 69 **Klicany u Prahy**
Tel. 00 42 0 / 2 - 72 122 111 (222)
Fax 00 42 0 / 2 - 72 122 199 (239)
loewe@kbexpert.cz

Türkei
Enkay Elektronik SAN. ve TiC. LTD. Sti
Levent. Cad. No: 46
1. Levent 80600 **Istanbul**
Tel. 00 90 / 216 - 523 00 10
Fax 00 90 / 216 - 523 18 99
mhatipo@yahoo.com

Ungarn
Basys Magyarorszagi KFT.
Epitok utja 2 - 4
H - 2040 **Budaörs**
Tel. 00 36 - 23 - 415 637 / 121
Fax 00 36 - 23 - 415 182
basys@mail.basys.hu

**Printed in the Federal Republic of Germany
by G+H Computergrafik und Design GmbH,
96328 Küps, Tel. 09264/9953-0
12-2003**

**Änderungen vorbehalten
Subject to modification
Modification réserves
Con riserva di modifiche
Reservado el derecho a introducir modificaciones
Wijzigingen voorbehouden**

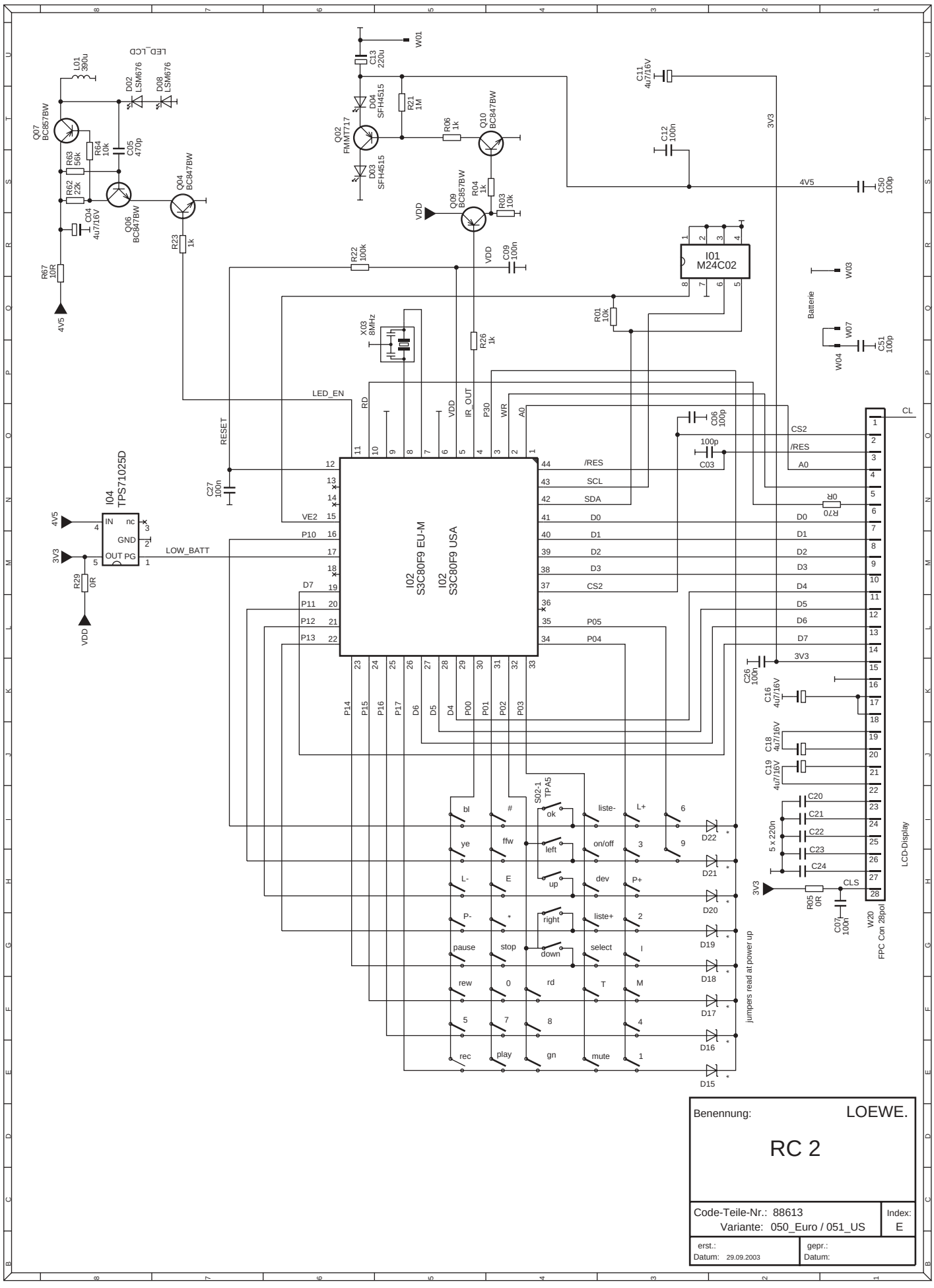
I02
S3C80F9 EU-M
I02
S3C80F9 USA
I04
TPS71025D
I01
M24C02
LED_LCD
L01 390u
D02 LSM676
D08 LSM676
Q07 BC857BW
R63 56k
R64 10k
C05 470p
R62 22k
Q06 BC847BW
Q04 BC847BW
C04 4u7/16V
R23 1k
R67 10R
4V5
W01
C13 220u
D04 SFH4515
D03 SFH4515
Q02 FMMT717
R21 1M
R06 1k
Q10 BC847BW
Q09 BC857BW
R04 1k
R03 10k
VDD
R22 100k
C09 100n
C11 4u7/16V
C12 100n
3V3
C50 100p
X03 8MHz
R26 1k
R01 10k
W03
Batterie
W07
W04
C51 100p
RESET
C27 100n
LED_EN
RD
VDD
IR_OUT
P30
WR
A0
/RES
SCL
SDA
D0
D1
D2
D3
CS2
D4
D5
D6
D7
P05
P04
C06 100p
100p
C03
R70 0R
CL
LOW_BATT
R29 0R
VE2
P10
P11
P12
P13
P14
P15
P16
P17
P00
P01
P02
P03
C26 100n
C16 4u7/16V
C18 4u7/16V
C19 4u7/16V
C20
C21
C22
C23
C24
5 x 220n
CLS
R05 0R
C07 100n
W20
FPC Con 28pol
LCD-Display
S02-1
TPA5
bl
#
ok
liste-
L+
6
ye
ffw
left
on/off
3
9
L-
E
up
dev
P+
P-
*
right
liste+
2
pause
stop
down
select
1
rew
0
rd
T
M
5
7
8
4
rec
play
gn
mute
1
D22
D21
D20
D19
D18
D17
D16
D15
jumpers read at power up
Benennung:
LOEWE.
RC 2
Code-Teile-Nr.: 88613
Variante: 050_Euro / 051_US
Index:
E
erst.:
Datum: 29.09.2003
gepr.:
Datum:

Infrarot-Fernbedienung RC2 Euro 263-89500.A50
Infrared Remote Control RC2 Euro 263-89500.A50

Infrarot-Fernbedienung RC2 US 263-89510.A00
Infrared Remote Control RC2 US 263-89510.A00

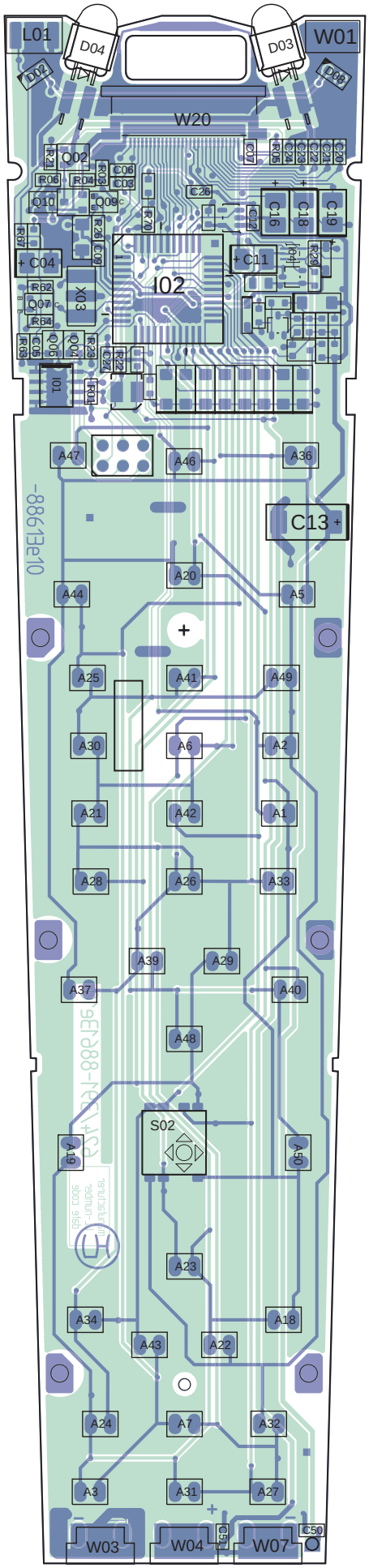

Lpl. Fernbedienung RC2 Euro 88613E050/051 Bestückungsseite
Remote Control RC2 Euro 88613E050/051 Components side

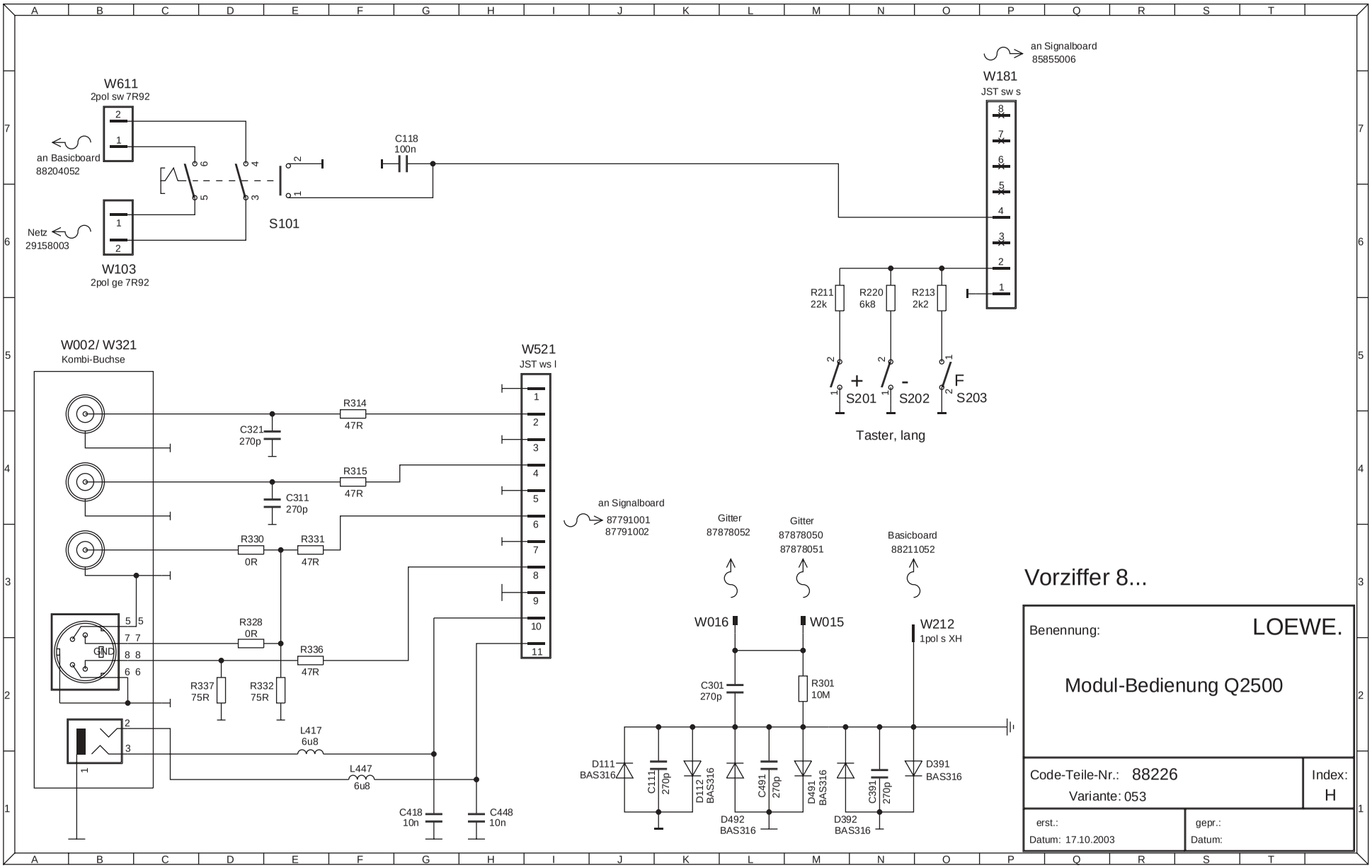
W611
2pol sw 7R92
an Basicboard
88204052
Netz
29158003
W103
2pol ge 7R92
S101
C118
100n
an Signalboard
85855006
W181
JST sw s
R211
22k
R220
6k8
R213
2k2
S201
S202
S203
Taster, lang
W002/ W321
Kombi-Buchse
W521
JST ws l
R314
47R
C321
270p
R315
47R
C311
270p
R330
0R
R331
47R
R328
0R
R336
47R
R337
75R
R332
75R
L417
6u8
L447
6u8
C418
10n
C448
10n
an Signalboard
87791001
87791002
Gitter
87878052
Gitter
87878050
87878051
Basicboard
88211052
W016
W015
W212
1pol s XH
C301
270p
R301
10M
D111
BAS316
C111
270p
D112
BAS316
D492
BAS316
C491
270p
D491
BAS316
D392
BAS316
C391
270p
D391
BAS316
Vorziffer 8...
Benennung:
LOEWE.
Modul-Bedienung Q2500
Code-Teile-Nr.: 88226
Variante: 053
Index:
H
erst.:
Datum: 17.10.2003
gepr.:
Datum:

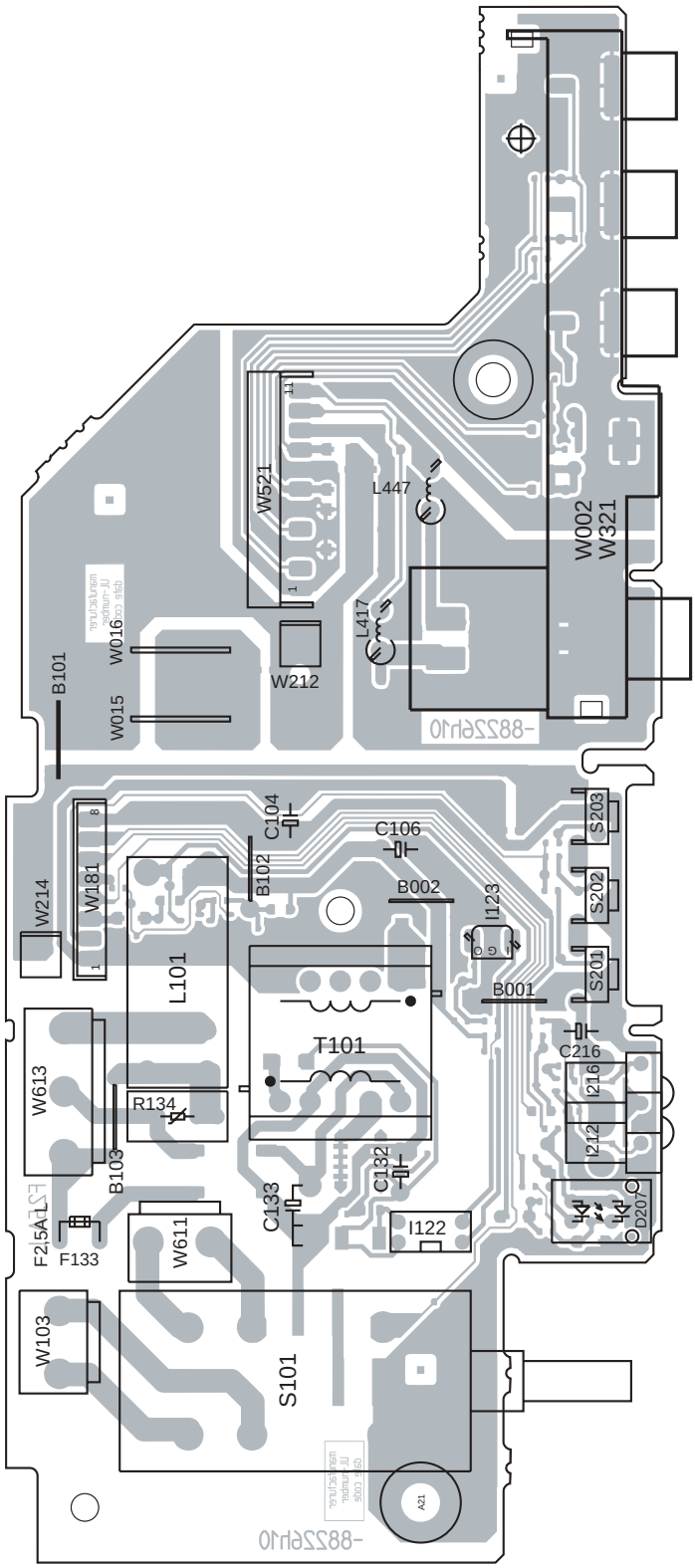

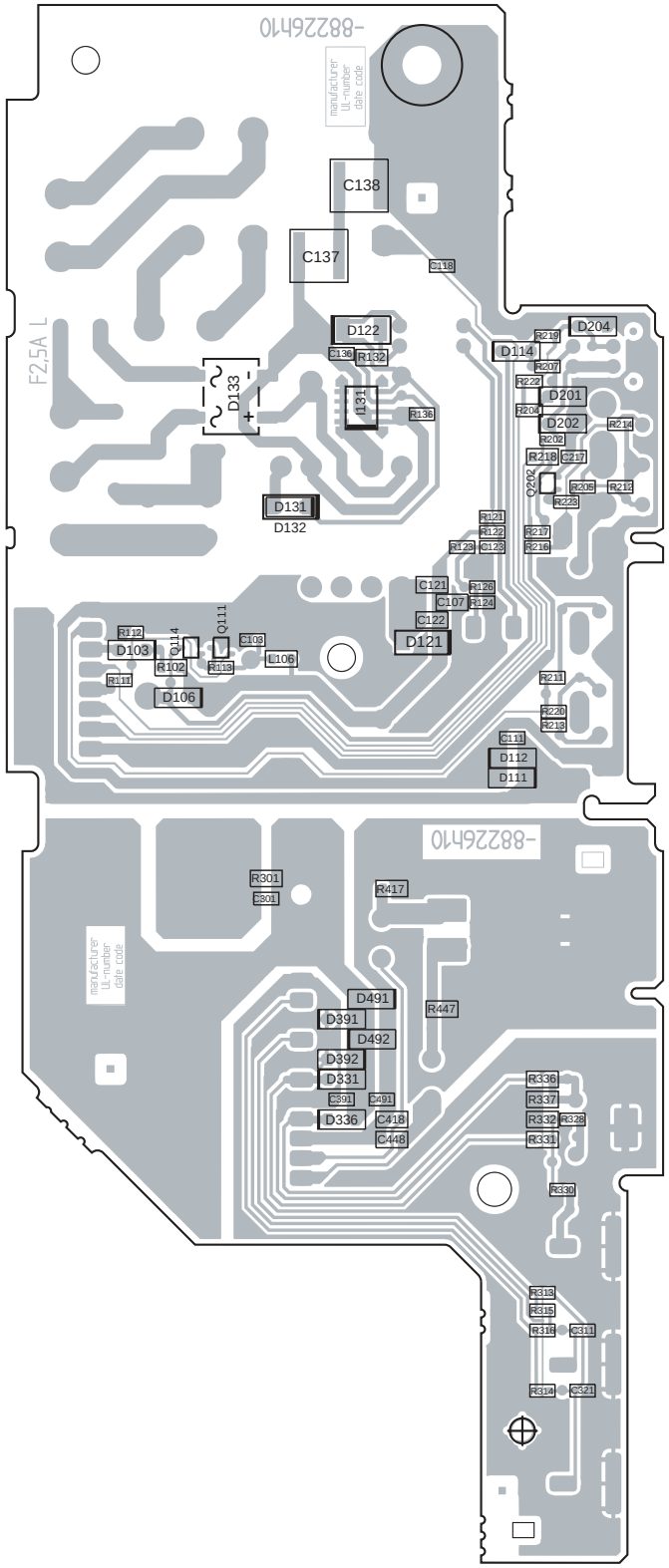

Lpl. Bedienteil 88226H Bestückungsseite
Control Unit P.C.B 88226H Components side

Lpl. Bedienteil 88226H Lötseite
Control Unit P.C.B 88226H Solder side

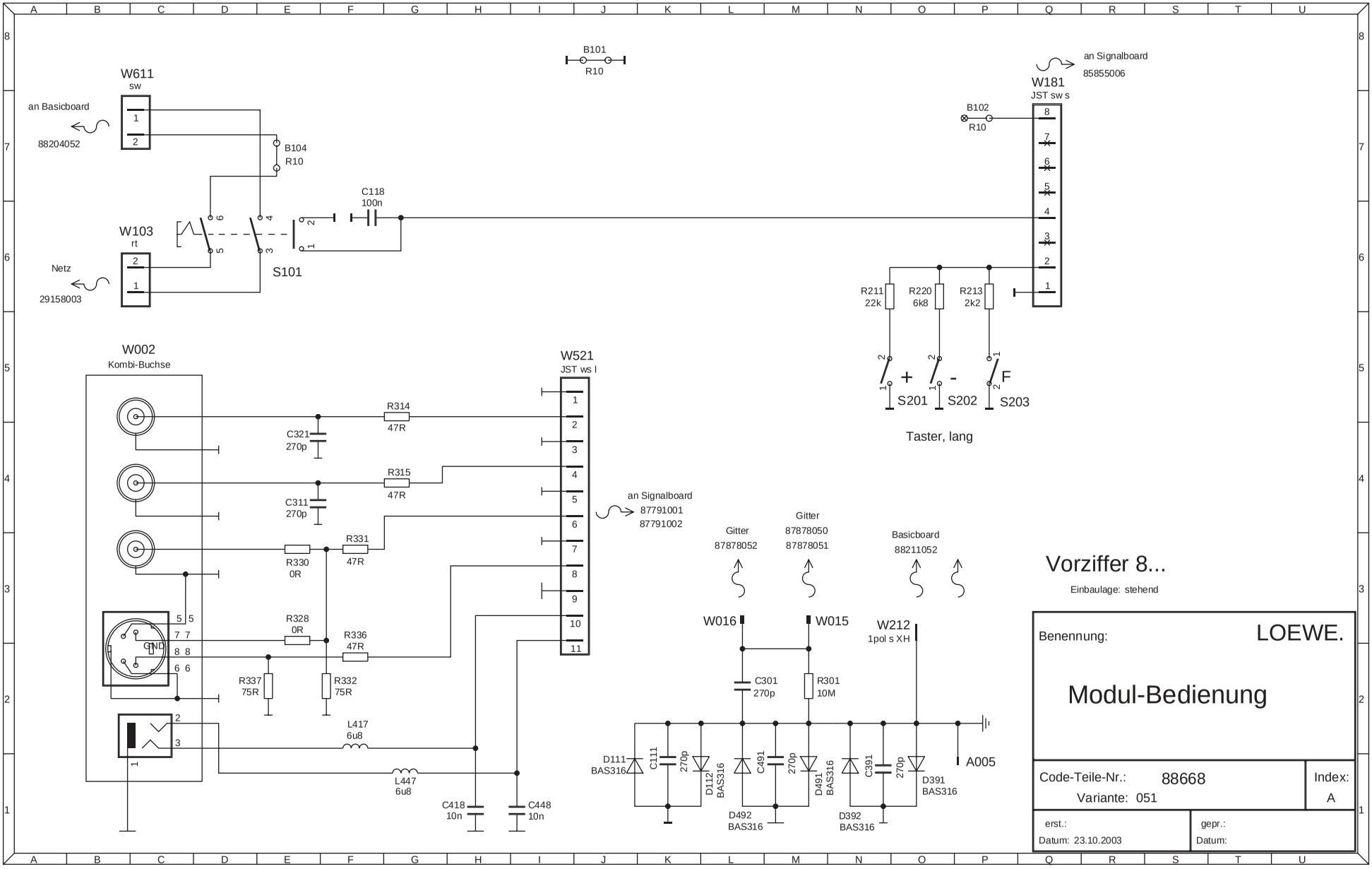
B101
R10
W611
sw
an Basicboard
88204052
B104
R10
W103
rt
Netz
29158003
S101
C118
100n
an Signalboard
85855006
W181
JST sw s
B102
R10
R211
22k
R220
6k8
R213
2k2
S201
S202
S203
Taster, lang
W002
Kombi-Buchse
GND
W521
JST ws l
R314
47R
C321
270p
R315
47R
C311
270p
R330
0R
R331
47R
R328
0R
R336
47R
R337
75R
R332
75R
L417
6u8
L447
6u8
C418
10n
C448
10n
an Signalboard
87791001
87791002
Gitter
87878052
Gitter
87878050
87878051
Basicboard
88211052
W016
W015
W212
1pol s XH
C301
270p
R301
10M
D111
BAS316
C111
270p
D112
BAS316
D492
BAS316
C491
270p
D491
BAS316
D392
BAS316
C391
270p
D391
BAS316
A005
Vorziffer 8...
Einbaulage: stehend
Benennung:
LOEWE.
Modul-Bedienung
Code-Teile-Nr.: 88668
Variante: 051
Index:
A
erst.:
Datum: 23.10.2003
gepr.:
Datum:

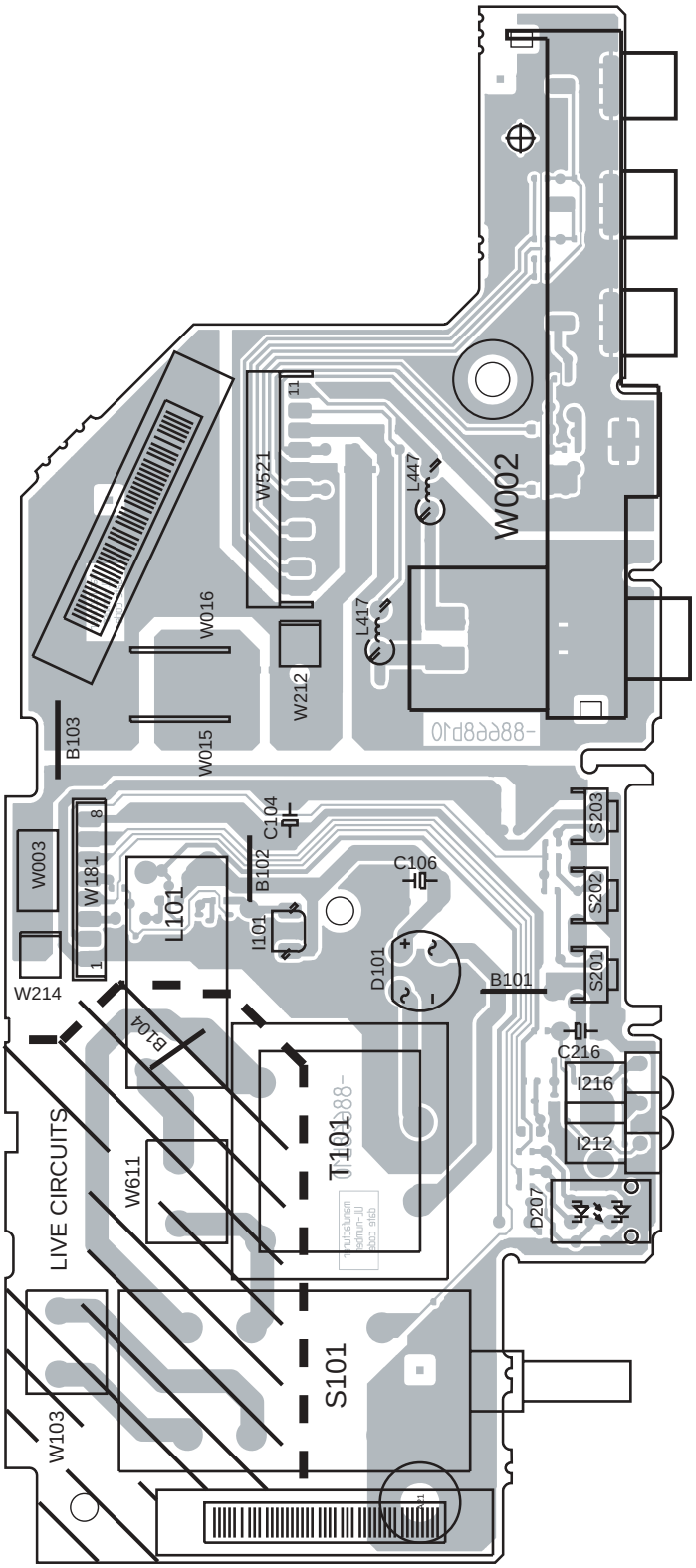

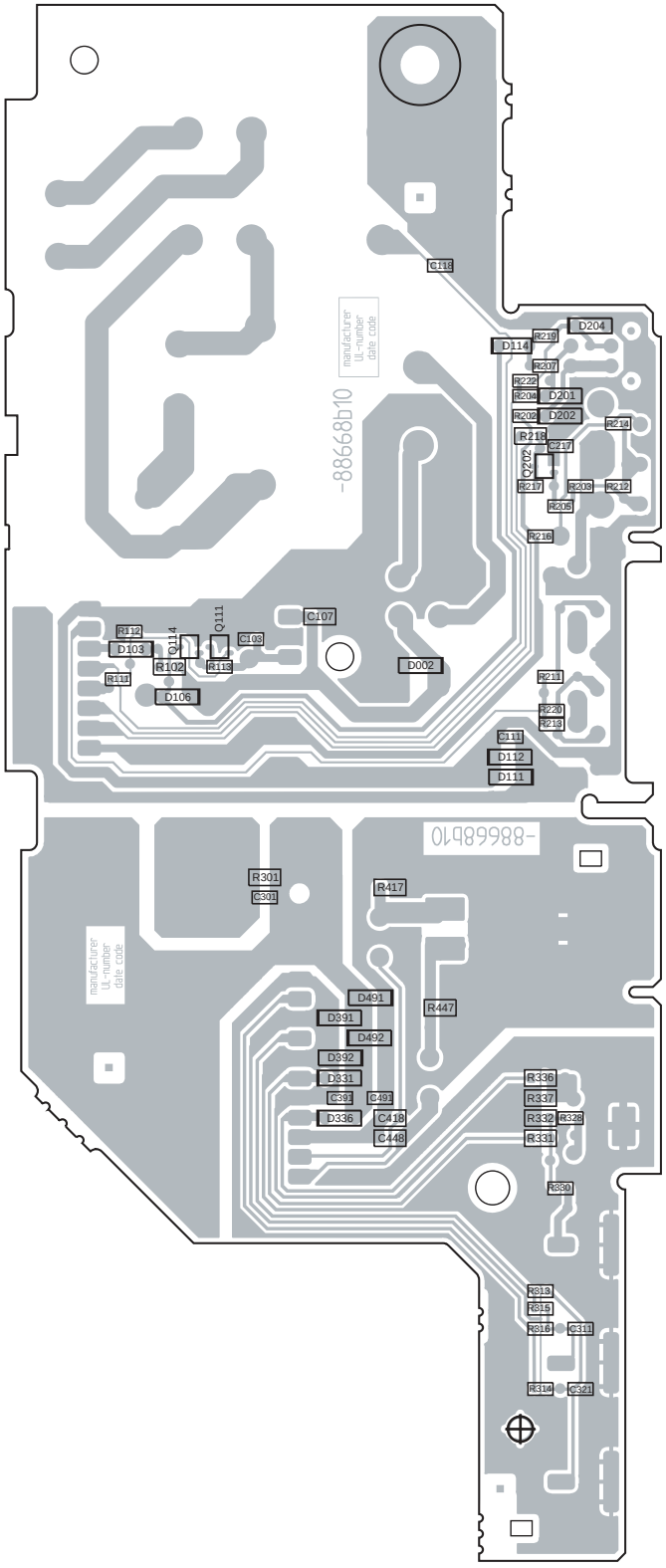

Lpl. Bedienteil 88668B Bestückungsseite
Control Unit P.C.B 88668B Components side

Lpl. Bedienteil 88668B Lötseite
Control Unit P.C.B 88668B Solder side

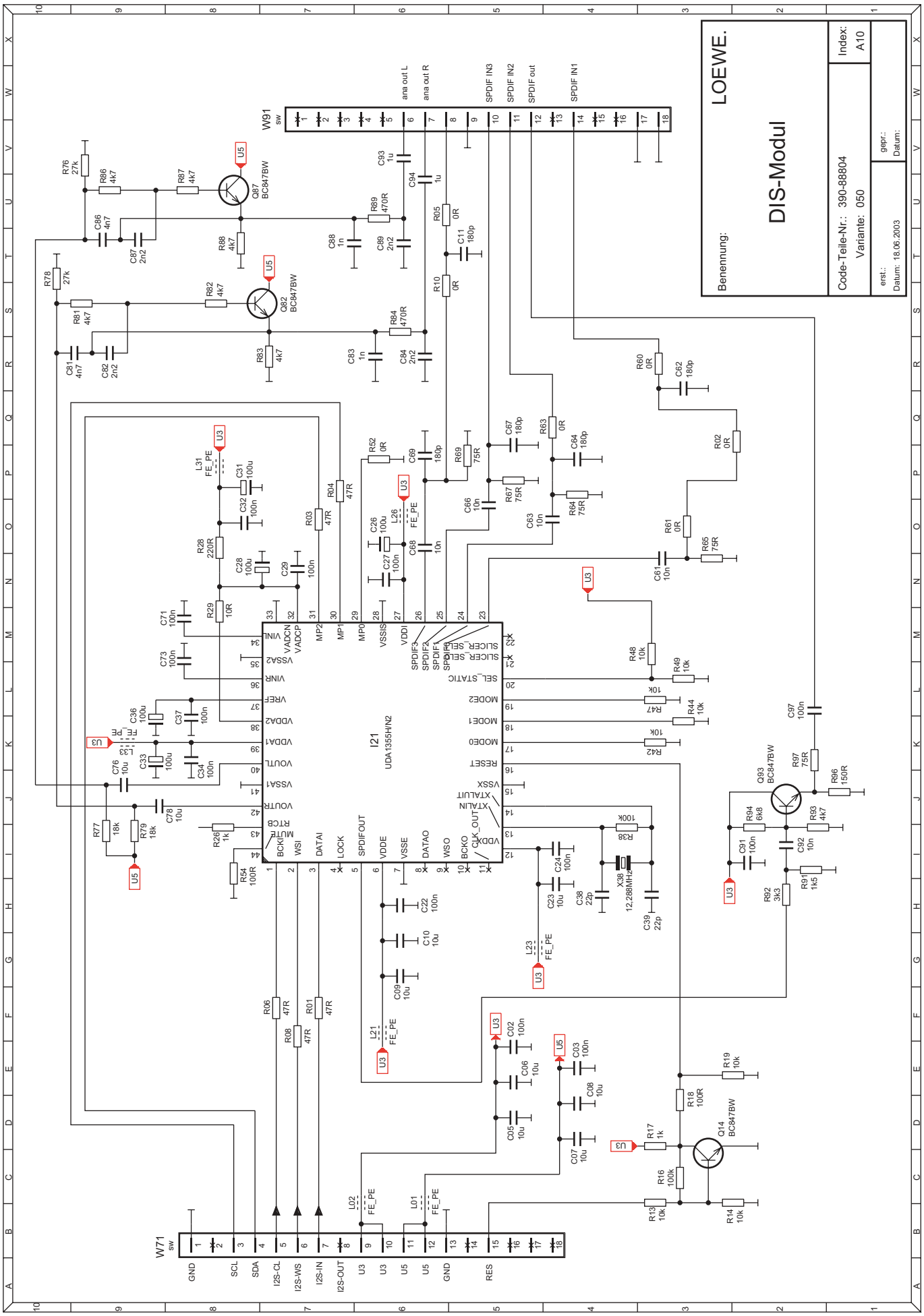
LOEWE.
Benennung:
DIS-Modul
Code-Teile-Nr.: 390-88804
Variante: 050
Index: A10
erst.: Datum: 18.06.2003
gepr.: Datum:
W91
W71
I21
UDA1355H/N2
ana out L
ana out R
SPDIF IN3
SPDIF IN2
SPDIF out
SPDIF IN1
GND
SCL
SDA
I2S-CL
I2S-WS
I2S-IN
I2S-OUT
RES

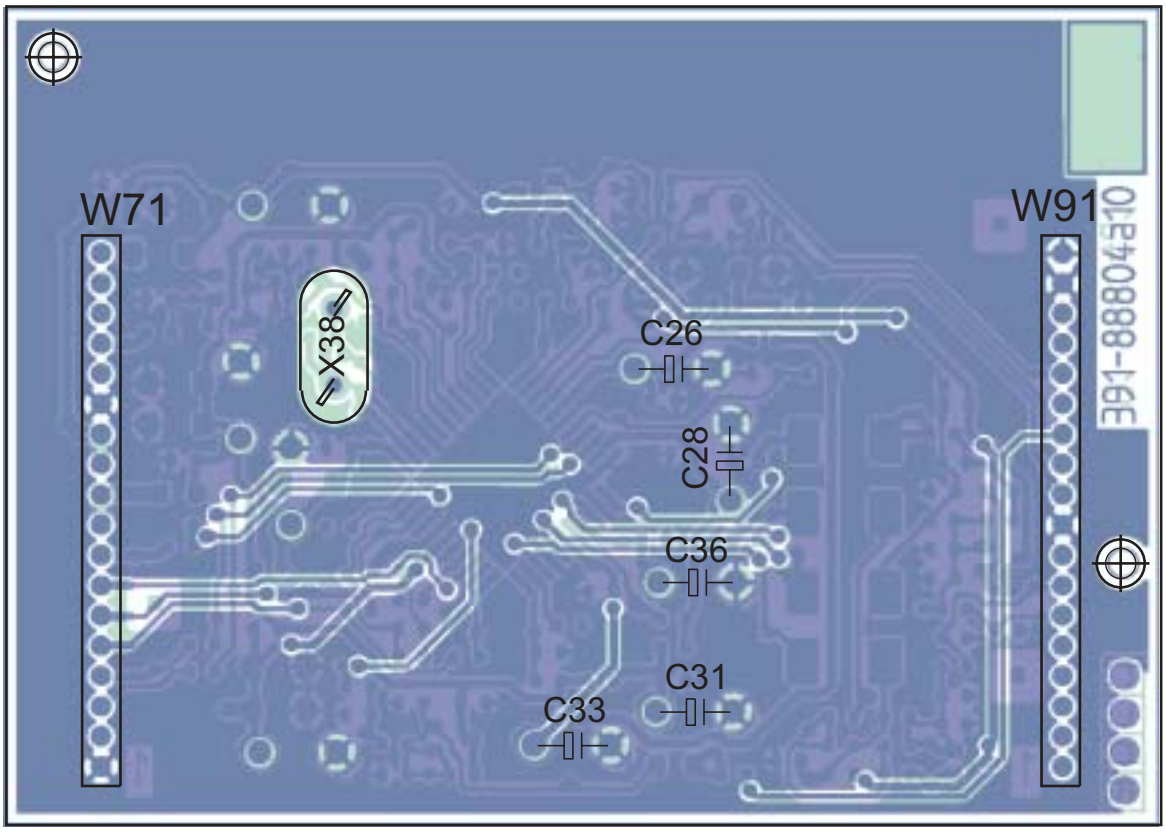

Lpl. DIS-Modul 88804A Bestückungsseite
DIS Module P.C.B 88804A Components side

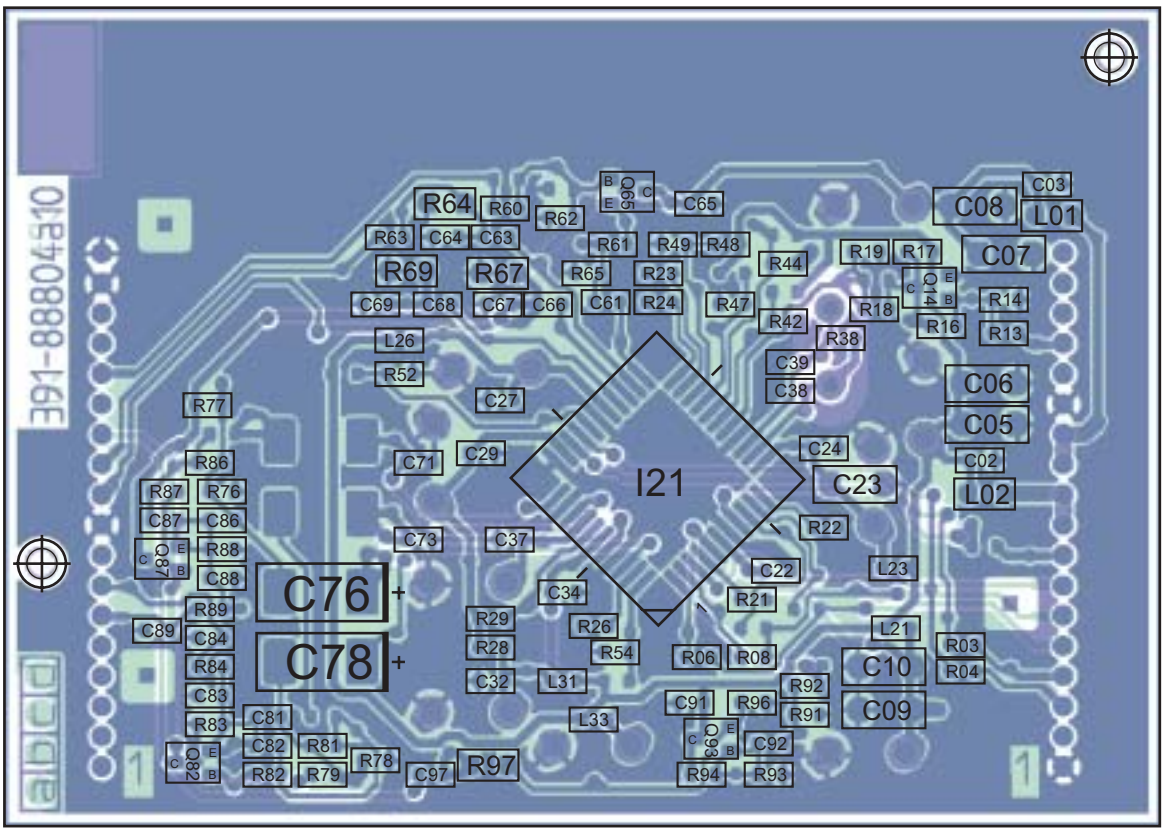

Lpl. DIS-Modul 88804A Lötseite
DIS Module P.C.B 88804A Solder side

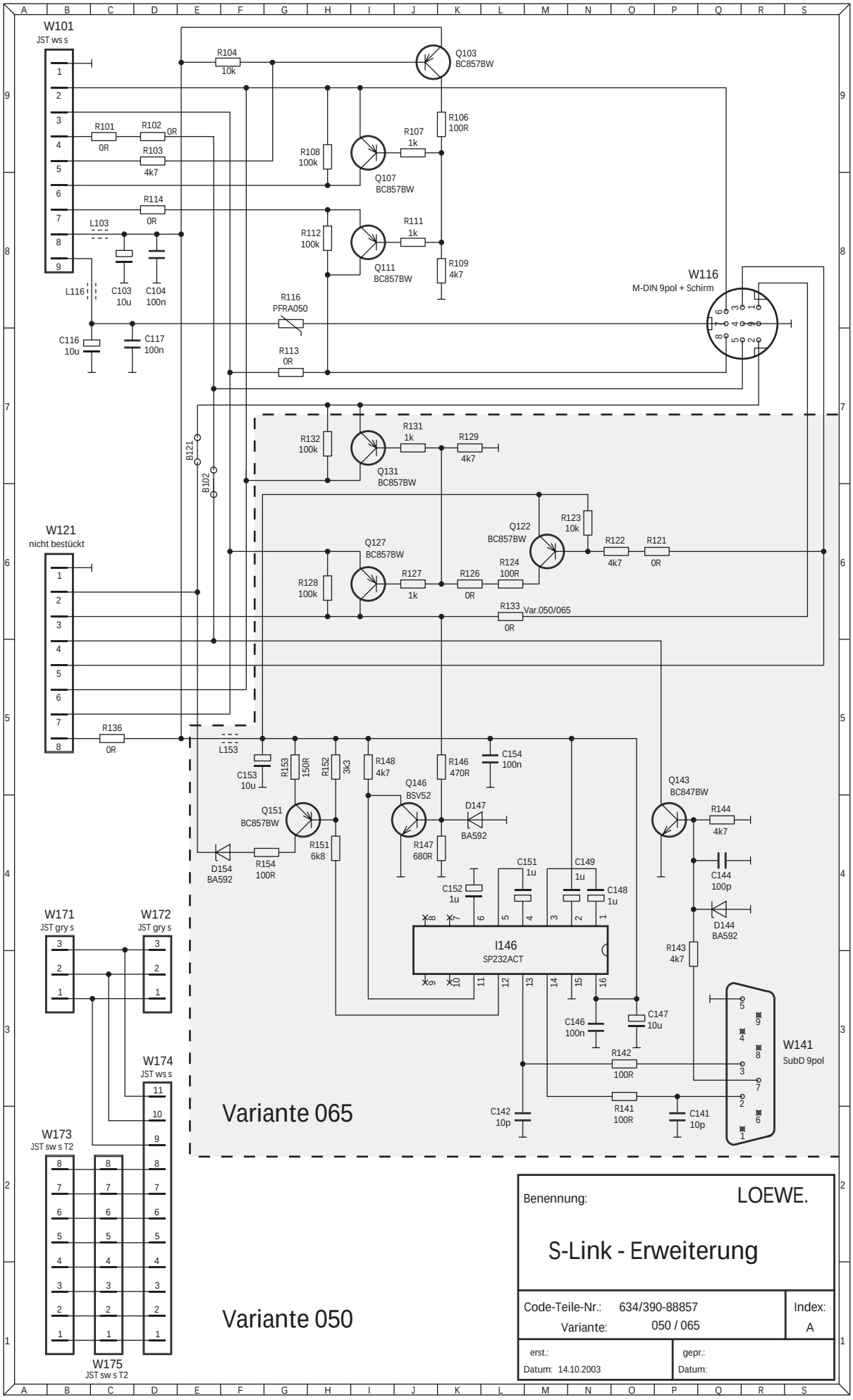
W101
JST ws s
W116
M-DIN 9pol + Schirm
W121
nicht bestückt
W141
SubD 9pol
W171
JST gry s
W172
JST gry s
W173
JST sw s T2
W174
JST ws s
W175
JST sw s T2
I146
SP232ACT
Variante 065
Variante 050
Benennung:
LOEWE.
S-Link - Erweiterung
Code-Teile-Nr.: 634/390-88857
Variante: 050 / 065
Index: A
erst.:
Datum: 14.10.2003
gepr.:
Datum:

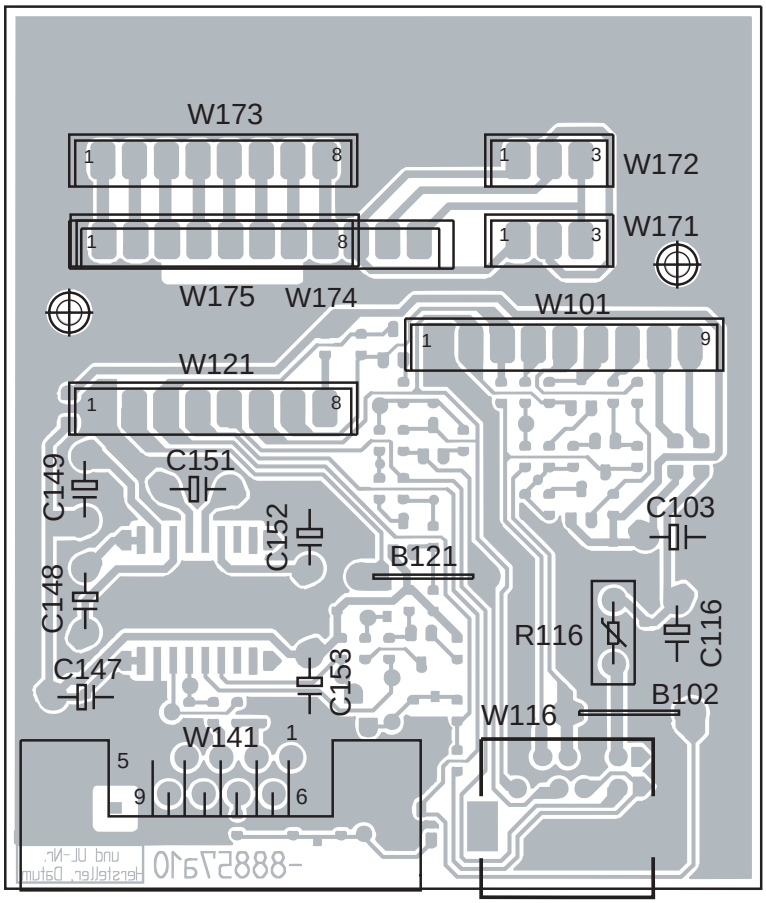

Lpl. S-Link-Erweiterung 88557A Bestückungsseite
S-Link Extension P.C.B 88557A Components side

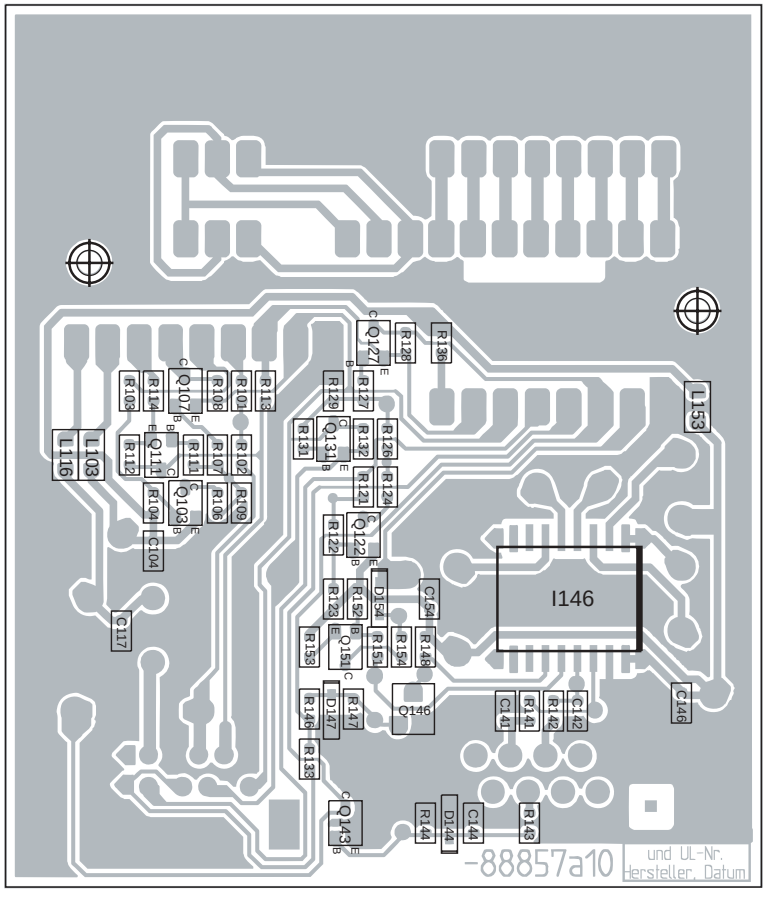

Lpl. S-Link-Erweiterung 88557A Lötseite
S-Link Extension P.C.B 88557A Solder side

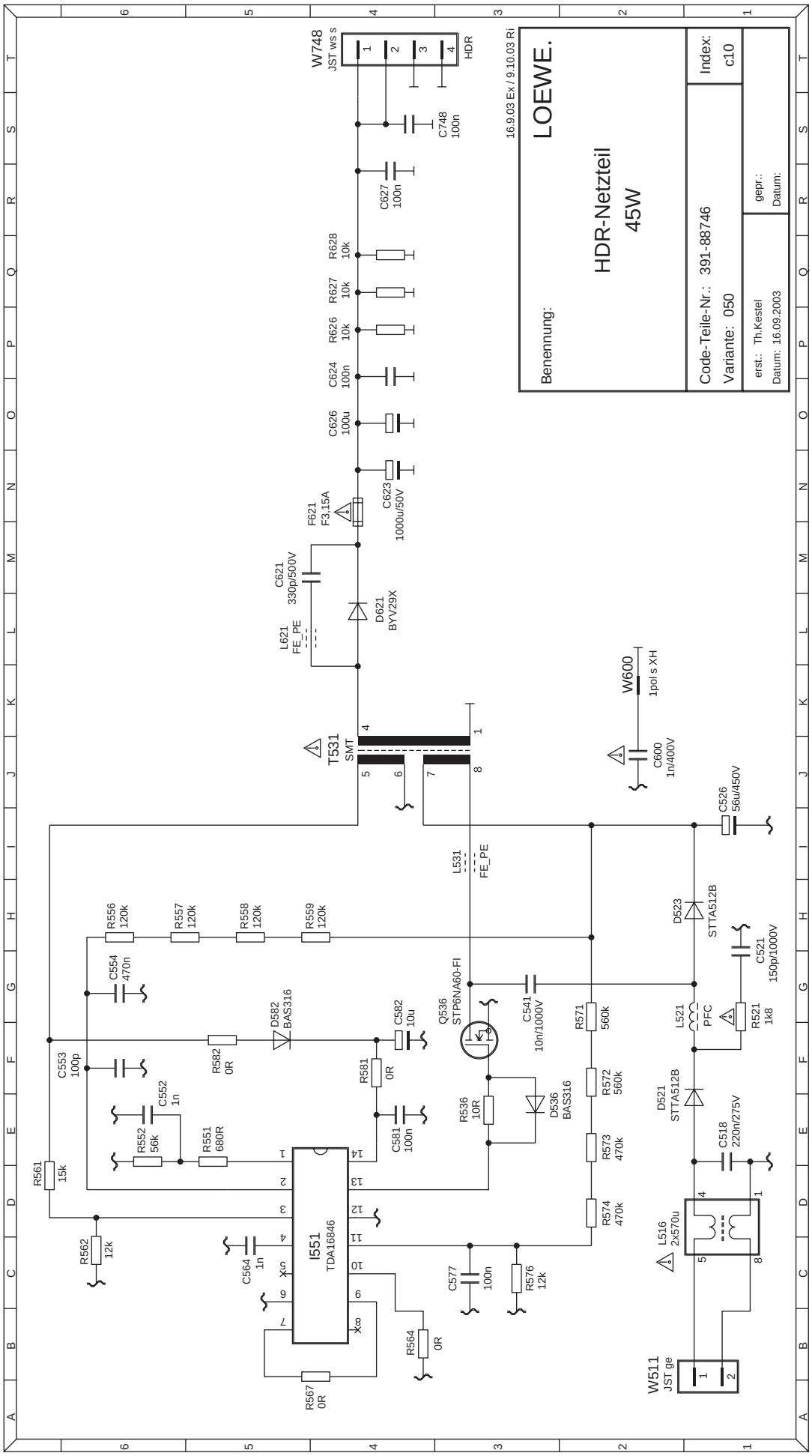
LOEWE.
Benennung:
HDR-Netzteil
45W
Code-Teile-Nr.: 391-88746
Variante: 050
Index: c10
erst.: Th.Kestel
Datum: 16.09.2003
gepr.:
Datum:
16.9.03 Ex / 9.10.03 Ri
W748
JST ws s
HDR
C748 100n
C627 100n
R628 10k
R627 10k
R626 10k
C624 100n
C626 100u
C623 1000u/50V
F621 F3,15A
C621 330p/500V
D621 BYV29X
L621 FE_PE
T531 SMT
W600 1pol s XH
C600 1n/400V
C526 56u/450V
L531 FE_PE
R556 120k
R557 120k
R558 120k
R559 120k
C554 470n
D582 BAS316
C582 10u
Q536 STP6NA60-FI
C541 10n/1000V
R571 560k
R572 560k
R573 470k
R574 470k
D523 STTA512B
C521 150p/1000V
L521 PFC
R521 1k8
D521 STTA512B
C518 220n/275V
L516 2x570u
C553 100p
R582 0R
R581 0R
C581 100n
R536 10R
D536 BAS316
C552 1n
R552 56k
R551 680R
R561 15k
R562 12k
I551 TDA16846
C564 1n
C577 100n
R576 12k
R564 0R
R567 0R
W511 JST ge

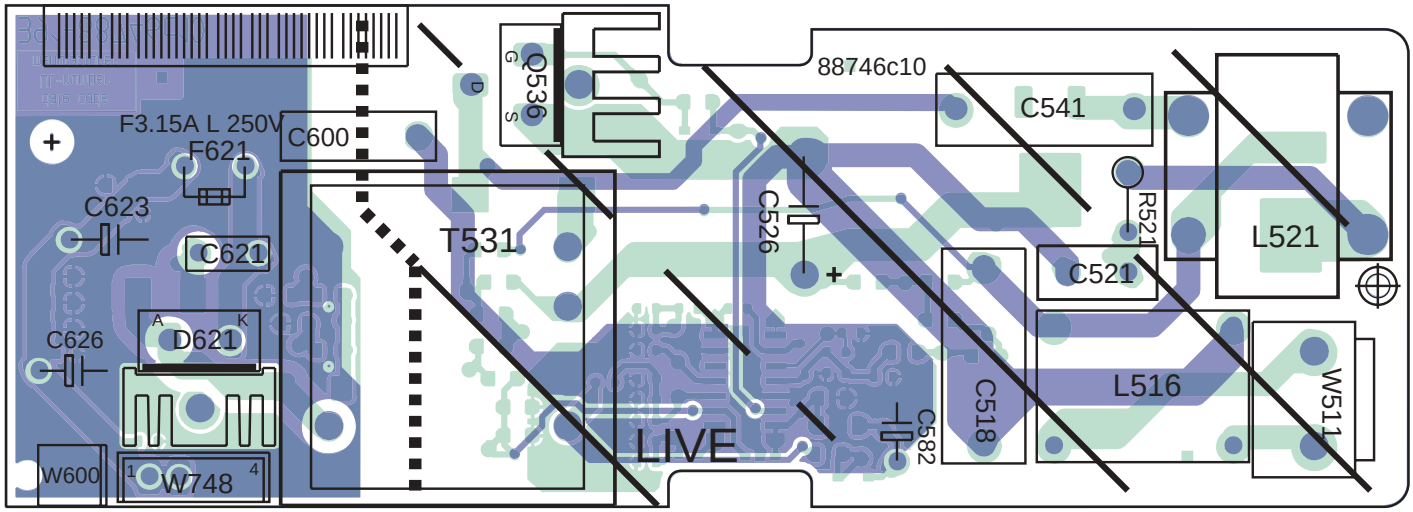

Lpl. Netzteil HDR 88746C Bestückungsseite • **HDR Power Supply 88746C** Components side

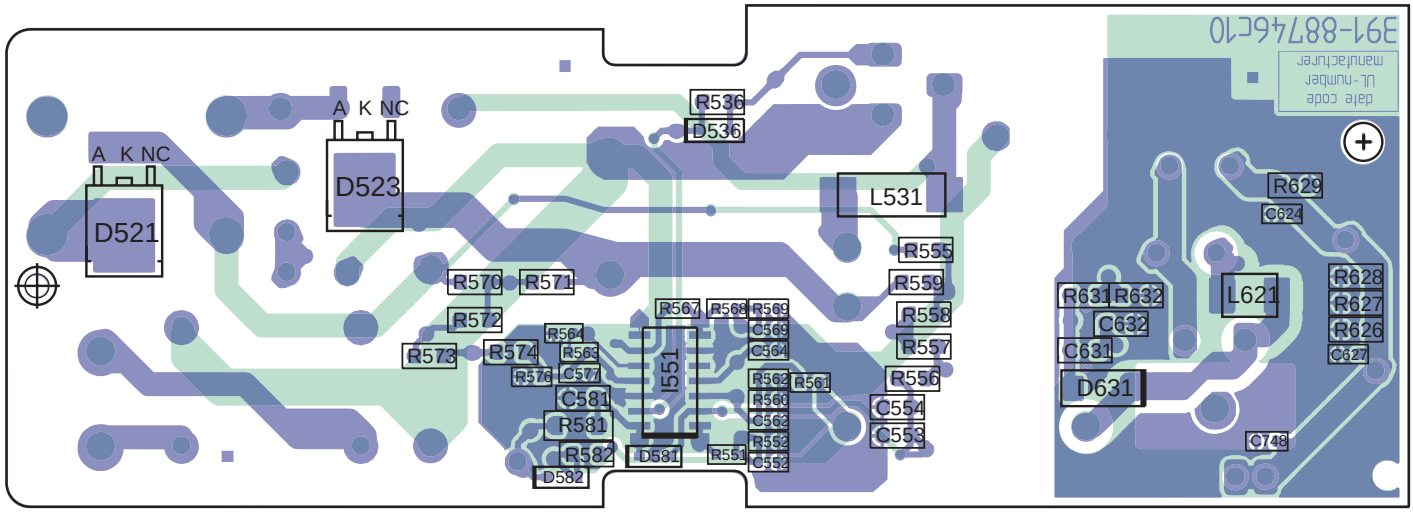

Lpl. Netzteil HDR 88746C Lötseite • **HDR Power Supply 88746C** Solder side

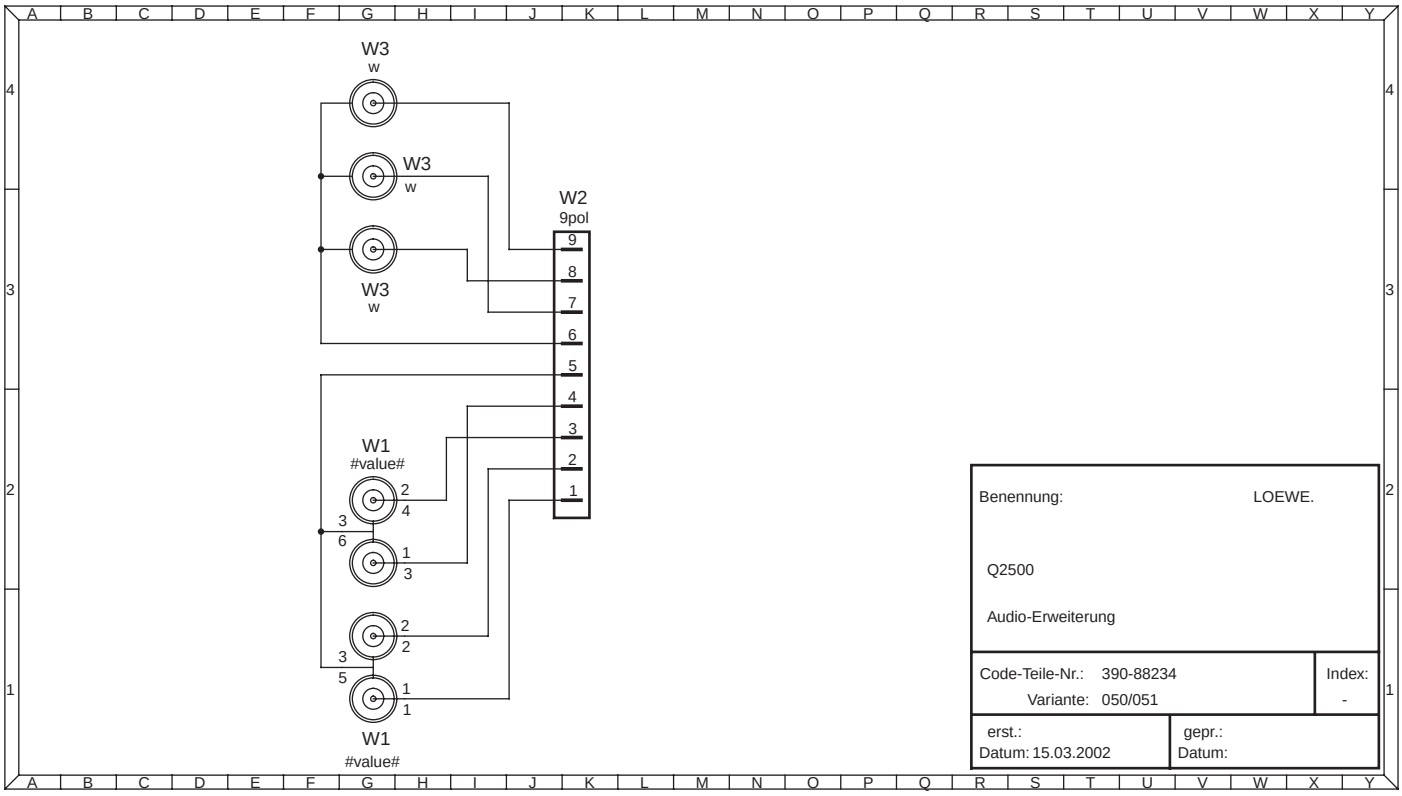

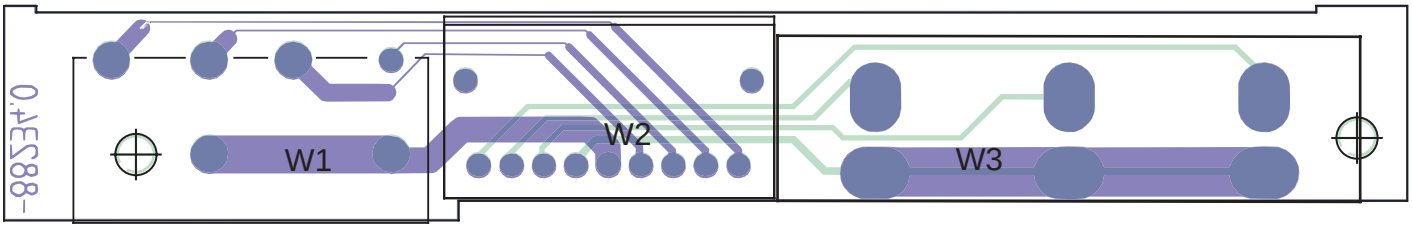

Ltpl. Audio-Erweiterung 88234 Bestückungsseite • **Audio Extension P.C.B 88234** Components side

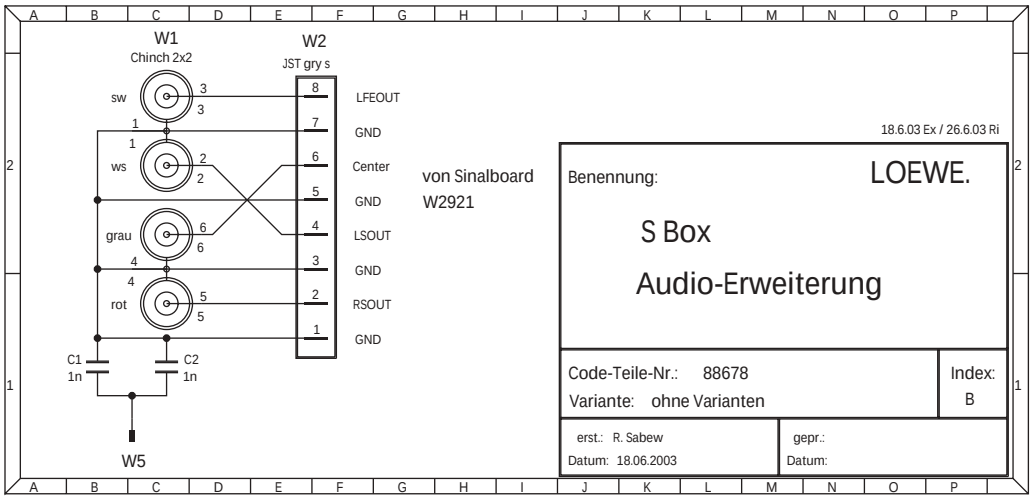

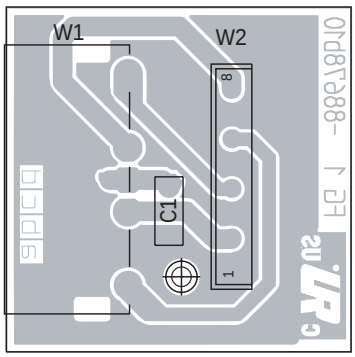

Lpl. Audio-Erweiterung 88678B
Bestückungsseite
Audio Extension P.C.B 88678B
Components side

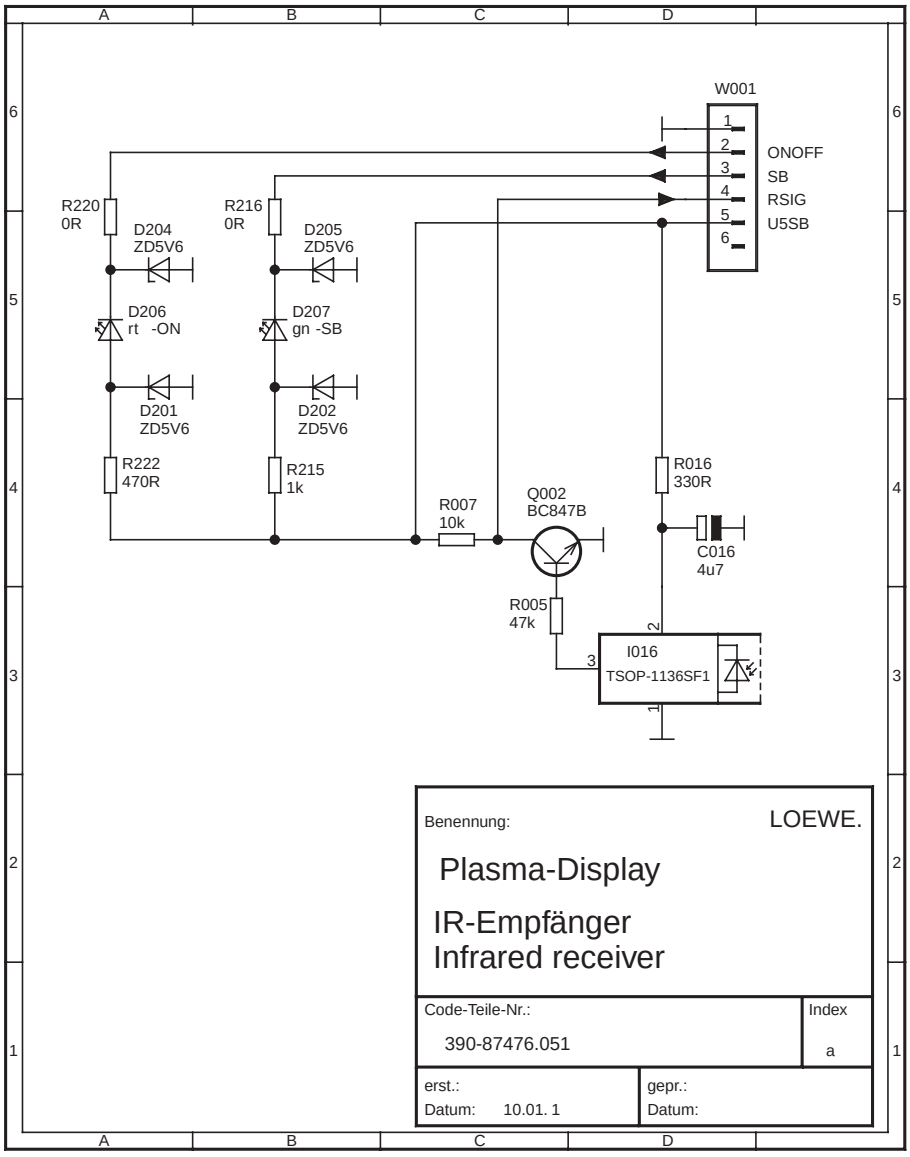

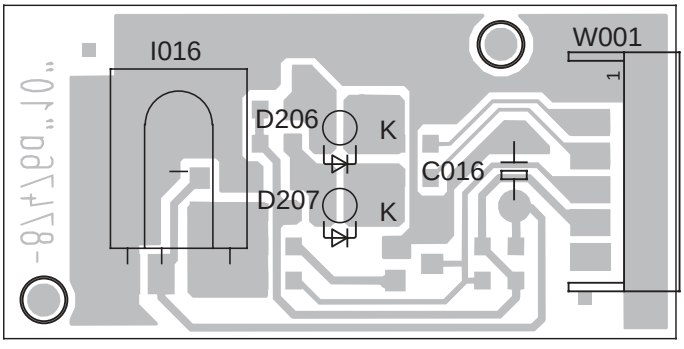

Lpl. IR-Empfänger 87476A
Bestückungsseite
Infrared receiver P.C.B 87476A
Components side

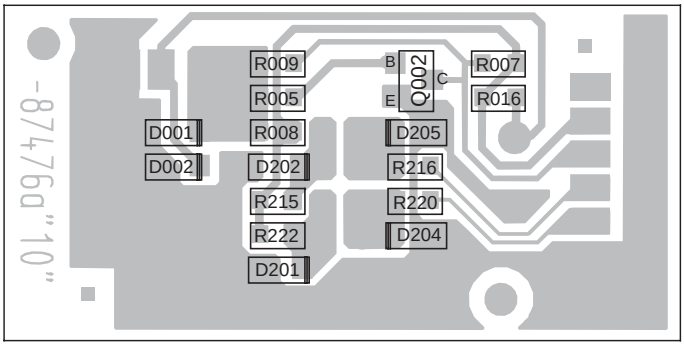

Lpl. IR-Empfänger 87476A
Lötseite
Infrared receiver P.C.B 87476A
Solder side

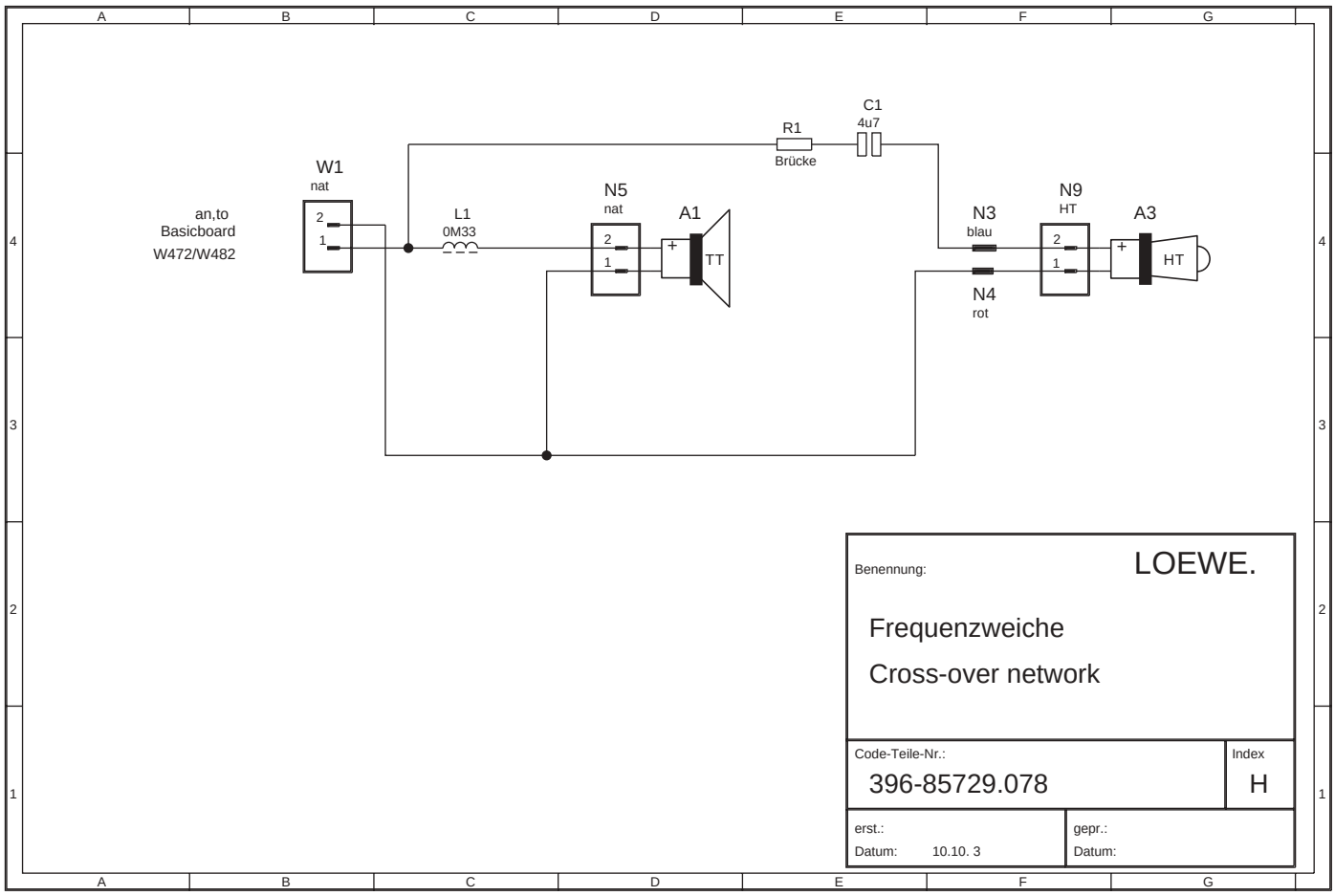

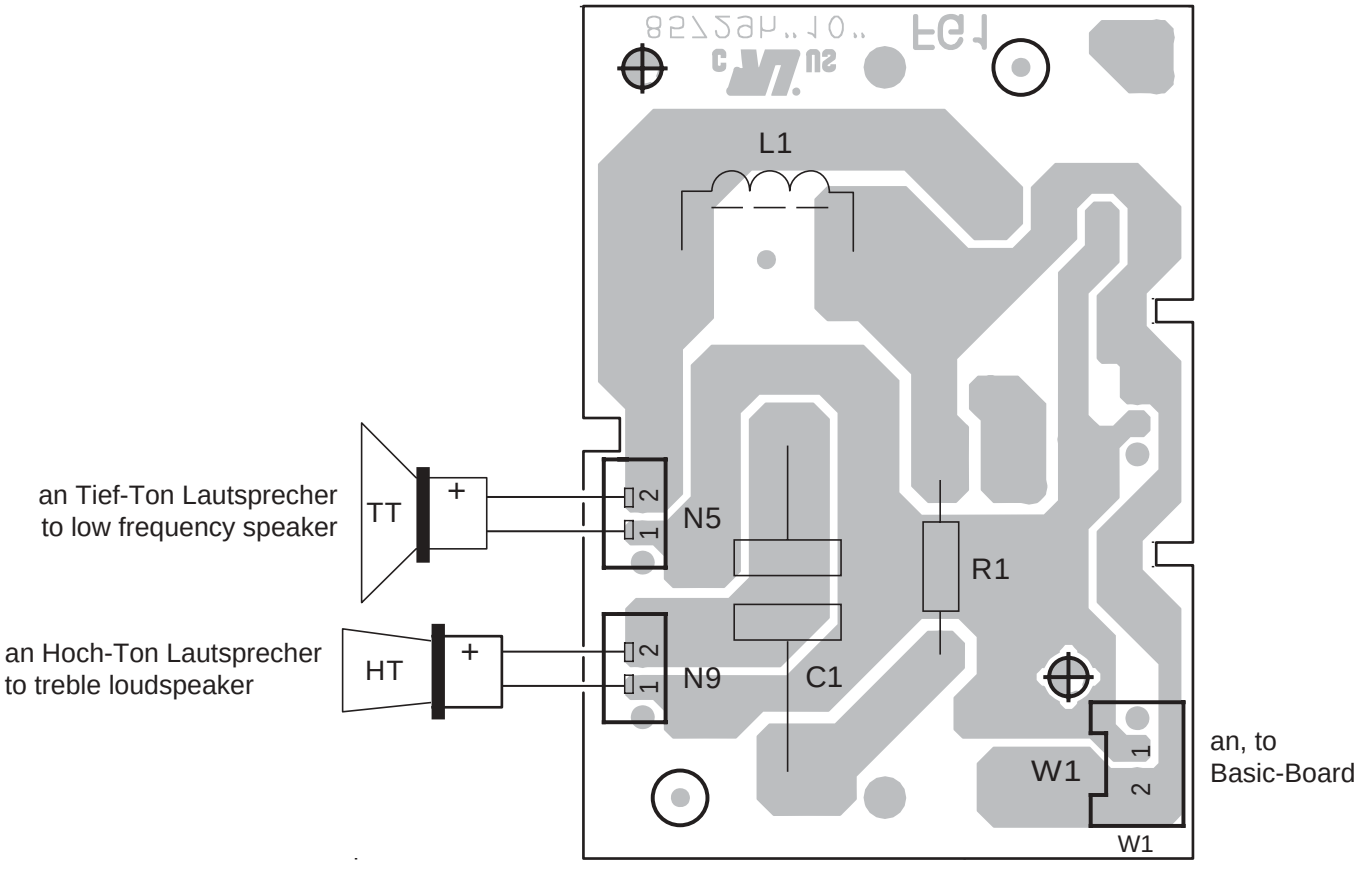

Ltpl. Frequenzweiche 85729H078 Bestückungsseite • **Cross-over network P.C.B 85729H078** Components side

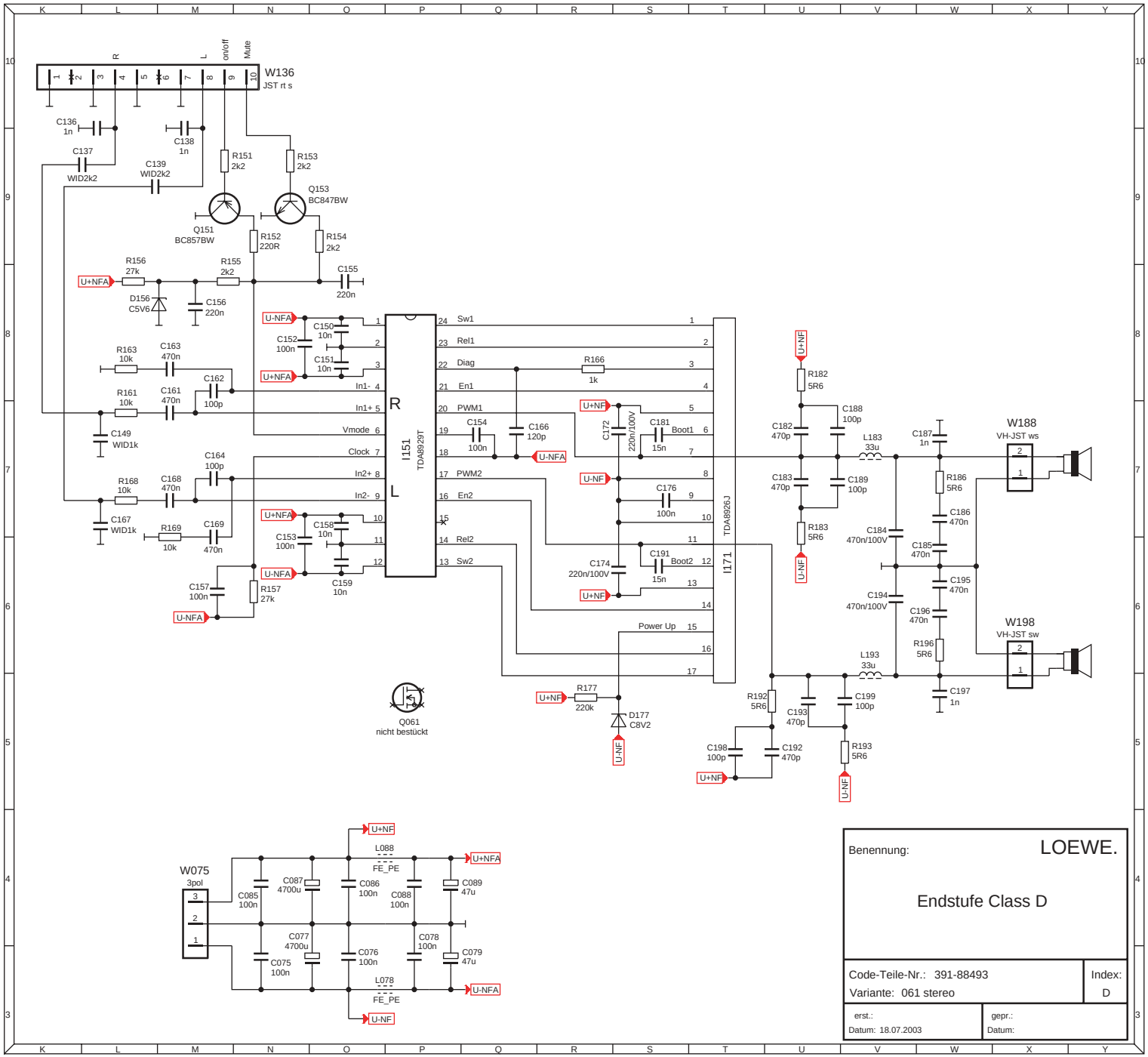
W136
JST rt s
R
L
on/off
Mute
C136 1n
C137 WID2k2
C138 1n
C139 WID2k2
R151 2k2
R153 2k2
Q151 BC857BW
Q153 BC847BW
R152 220R
R154 2k2
R155 2k2
R156 27k
C155 220n
D156 C5V6
C156 220n
U+NFA
C149 WID1k
C167 WID1k
R163 10k
R161 10k
R168 10k
R169 10k
C163 470n
C161 470n
C168 470n
C169 470n
C162 100p
C164 100p
C150 10n
C152 100n
C151 10n
C153 100n
C158 10n
C159 10n
C157 100n
R157 27k
I151
TDA8929T
Sw1
Rel1
Diag
En1
PWM1
PWM2
En2
Rel2
Sw2
In1-
In1+
Vmode
Clock
In2+
In2-
R166 1k
C154 100n
C166 120p
C172 220n/100V
C181 15n
Boot1
C176 100n
C174 220n/100V
C191 15n
Boot2
Power Up
I171
TDA8926J
U-NF
R182 5R6
R183 5R6
C182 470p
C183 470p
C188 100p
C189 100p
L183 33u
C184 470n/100V
C194 470n/100V
C187 1n
C186 470n
C185 470n
C195 470n
C196 470n
R186 5R6
R196 5R6
L193 33u
C197 1n
C199 100p
C193 470p
C192 470p
R192 5R6
R193 5R6
C198 100p
W188
VH-JST ws
W198
VH-JST sw
R177 220k
D177 C8V2
Q061
nicht bestückt
W075
3pol
C085 100n
C087 4700u
C086 100n
C088 100n
C089 47u
C077 4700u
C075 100n
C076 100n
C078 100n
C079 47u
L088
FE_PE
L078
FE_PE
Benennung:
LOEWE.
Endstufe Class D
Code-Teile-Nr.: 391-88493
Variante: 061 stereo
Index: D
erst.:
Datum: 18.07.2003
gepr.:
Datum:

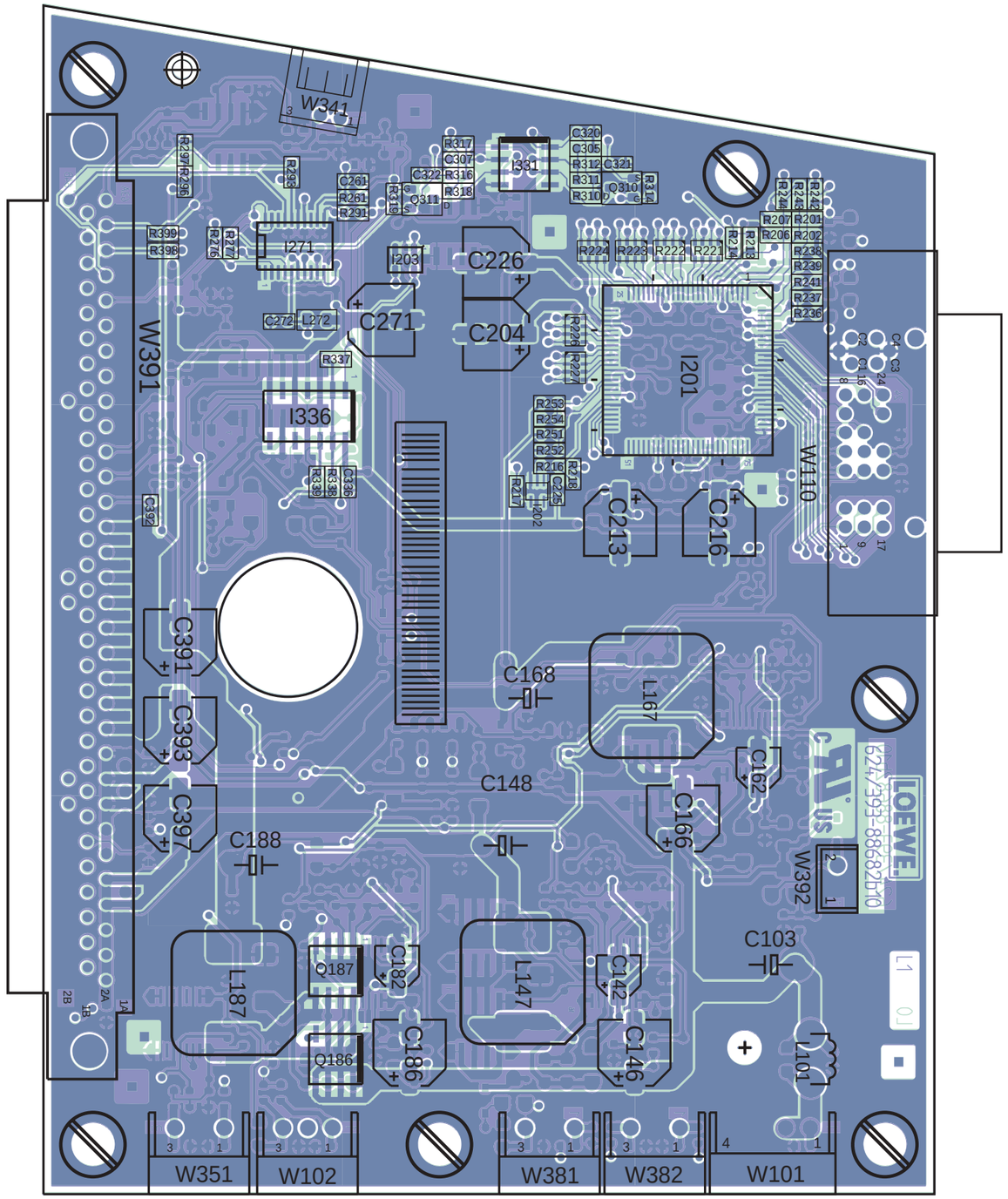

Lpl. DVI-Erweiterung 88682B Bestückungsseite • **DVI Extension P.C.B 88682B** Components side

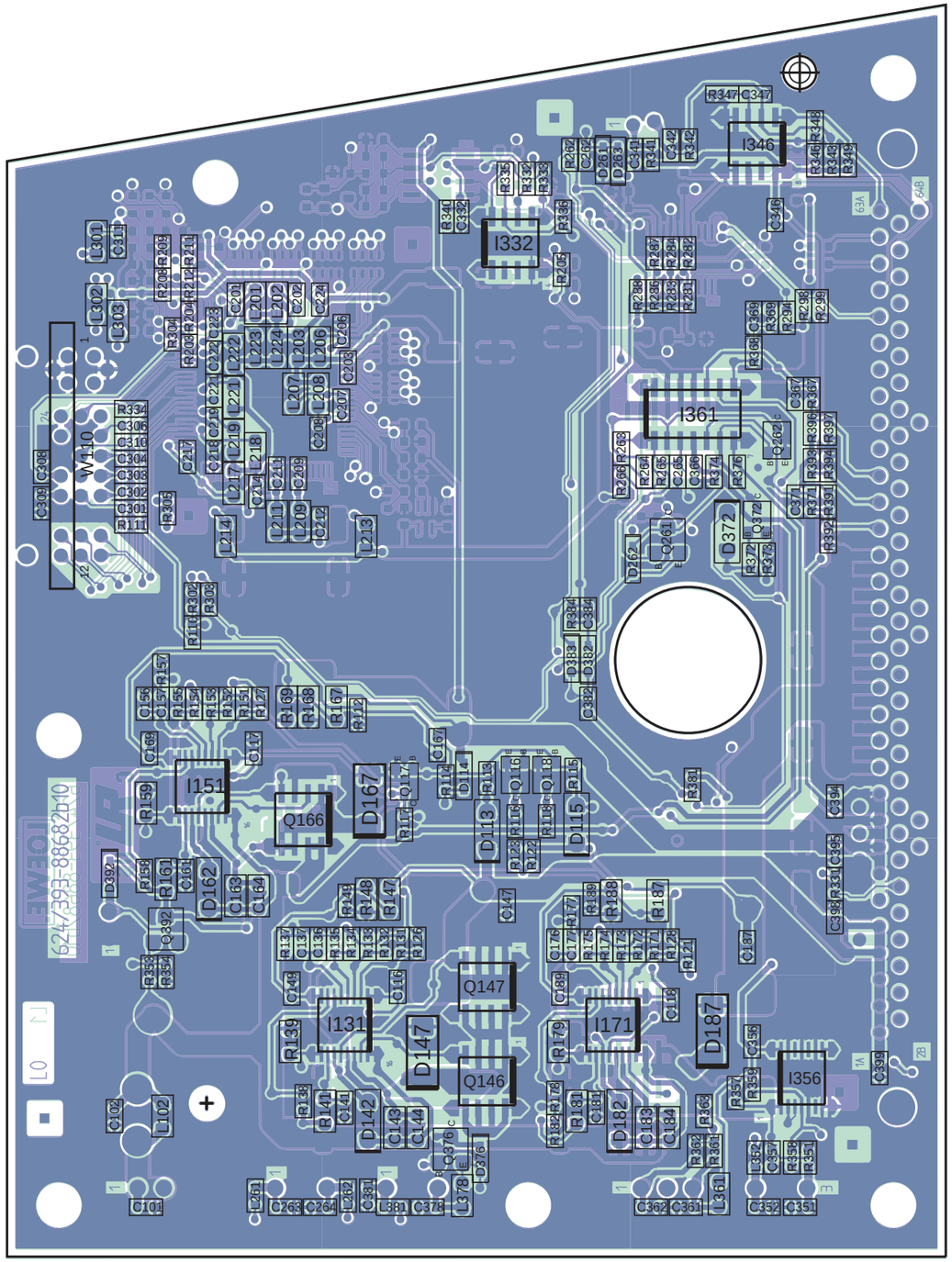

Lpl. DVI-Erweiterung 88682B Lötseite • **DVI Extension P.C.B 88682B** Solder side

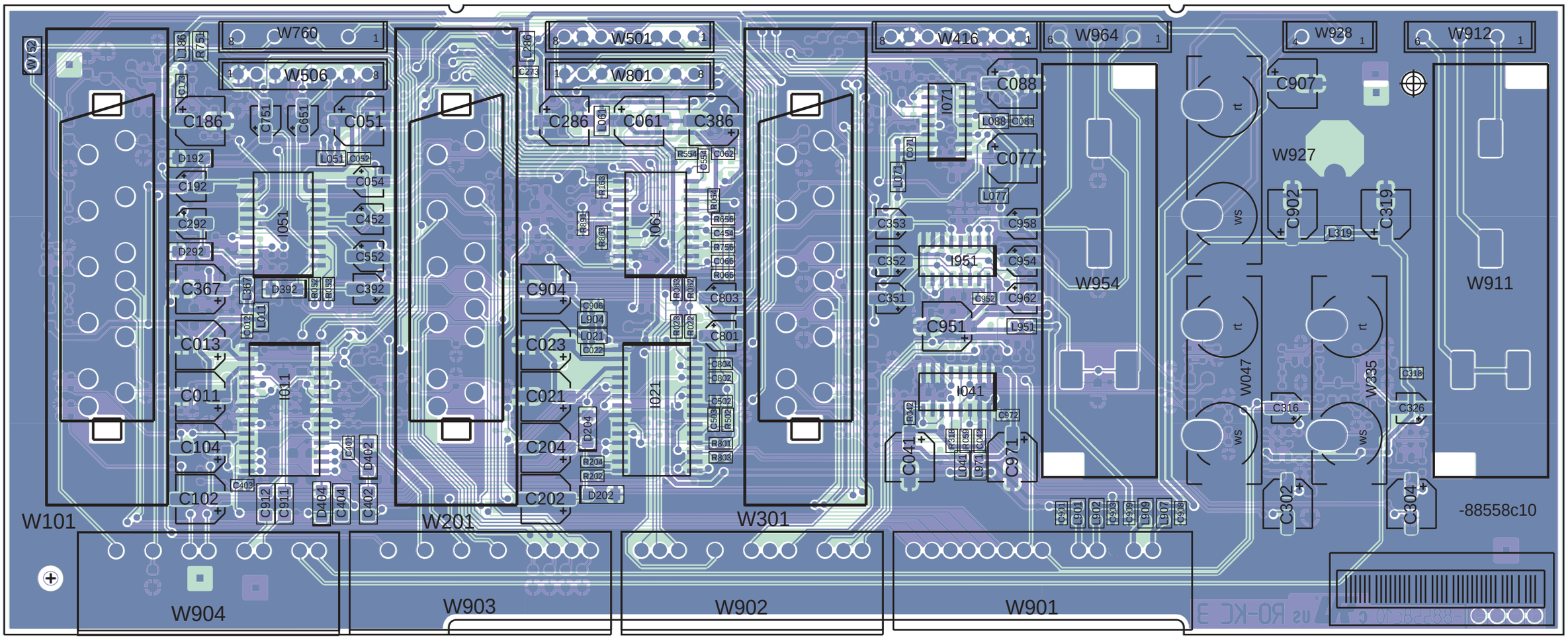

Lpl. Rear Board 88558C Bestückungsseite • **Rear Board P.C.B 88558C** Components side

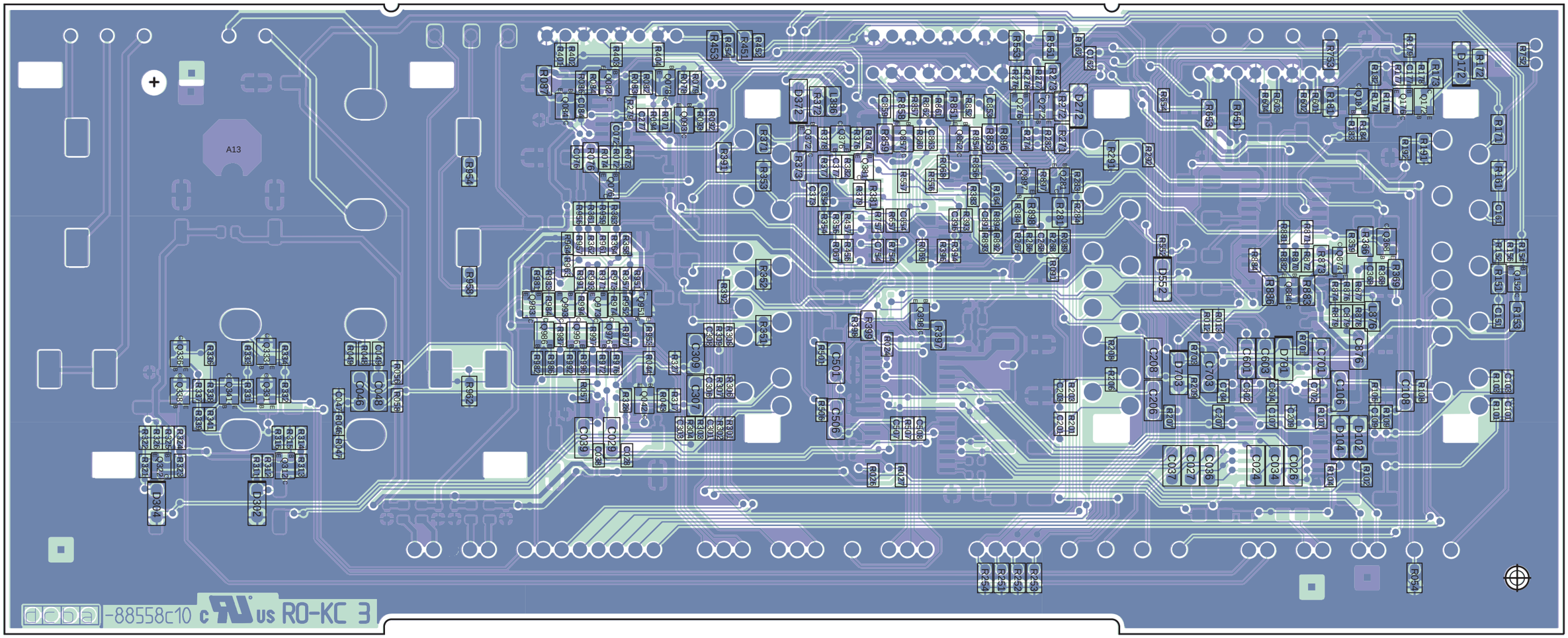

Lpl. Rear Board 88558C Lötseite • **Rear Board P.C.B 88558C** Solder side

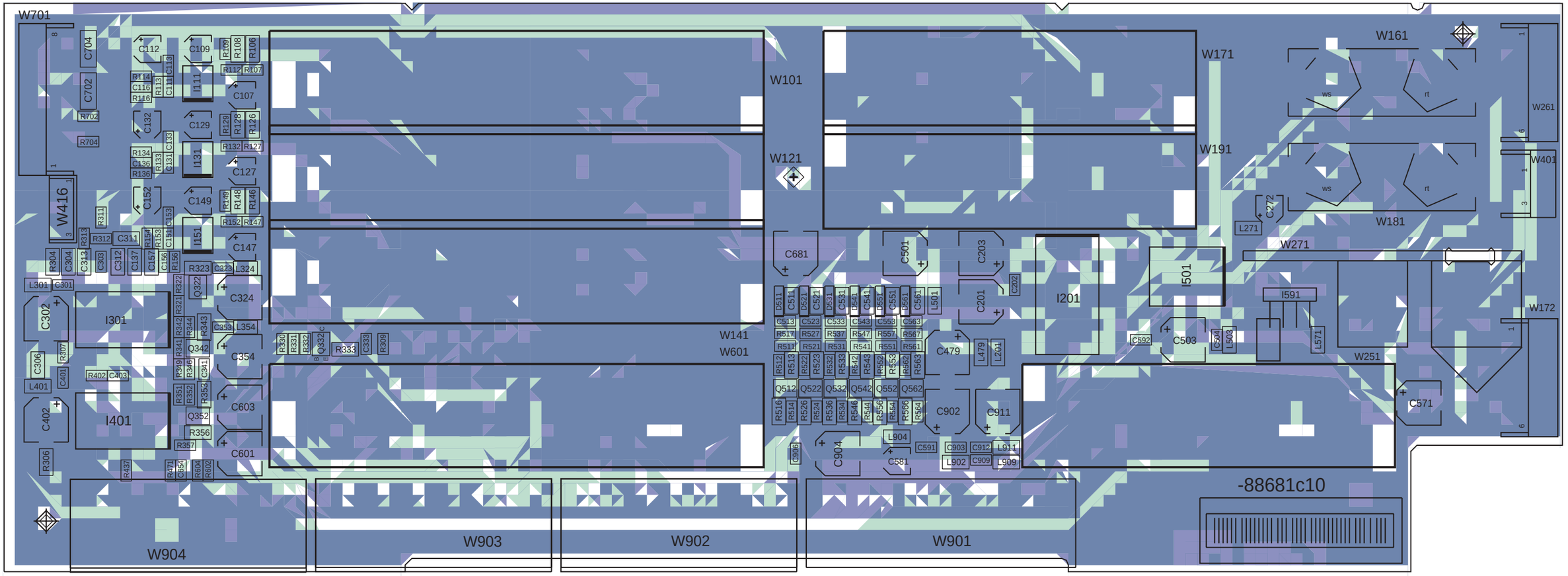

Lpl. Rear-Board S-Box USA 88681C Bestückungsseite • **Rear Board S-Box USA P.C.B 88681C** Components side

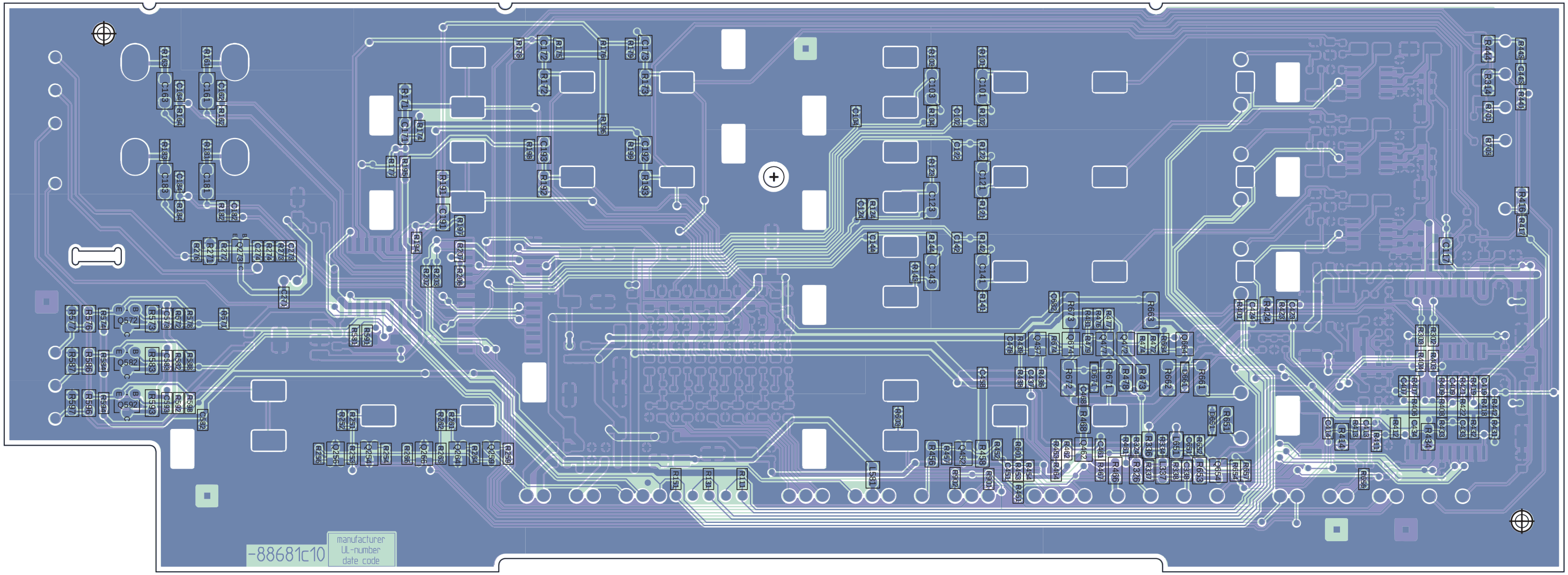

Lpl. Rear-Board S-Box USA 88681C Lötseite • **Rear Board S-Box USA P.C.B 88681C** Solder side

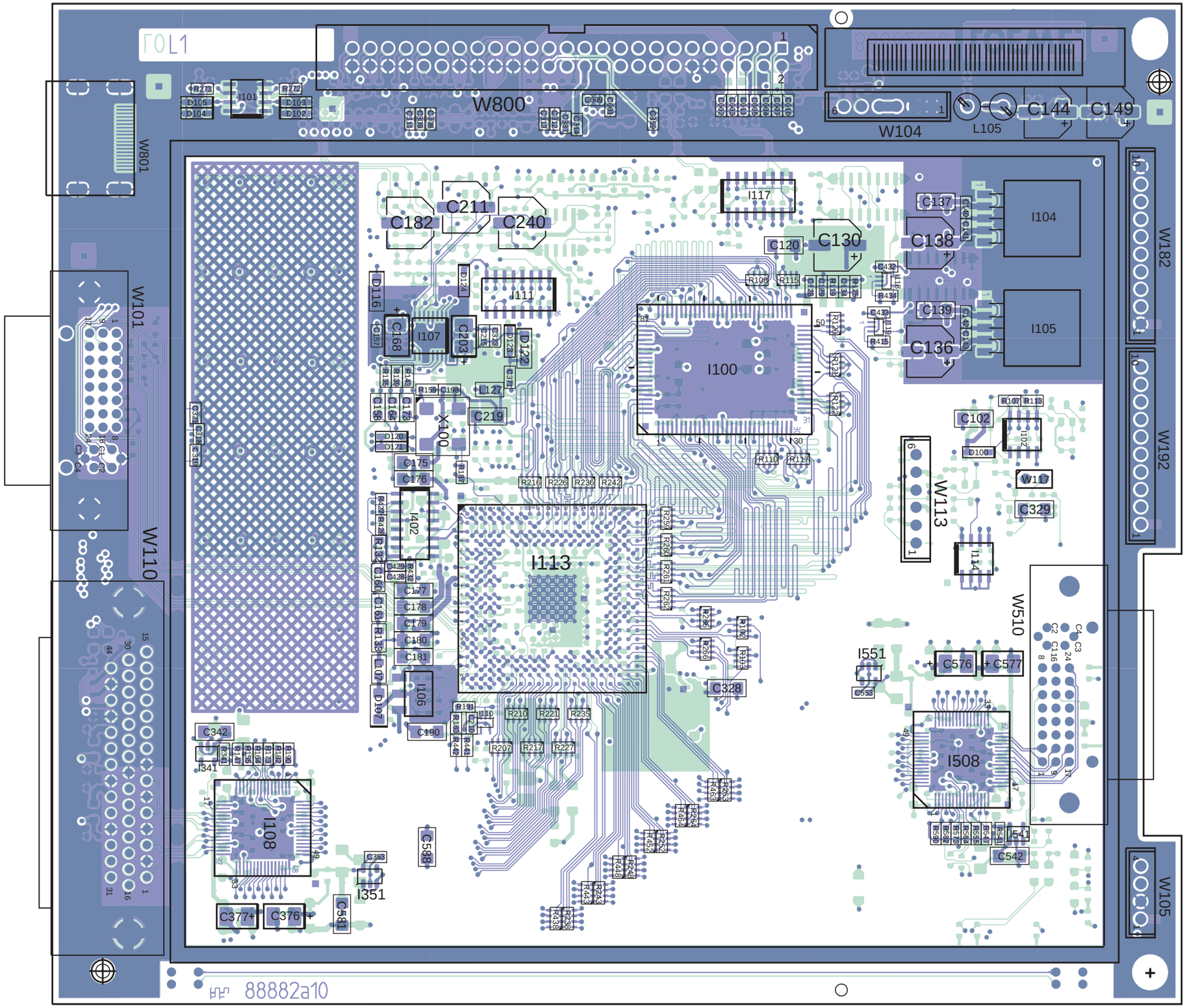

Lpl. Scaler Board 88882A Bestückungsseite • **Scaler Board P.C.B 88882A** Components side

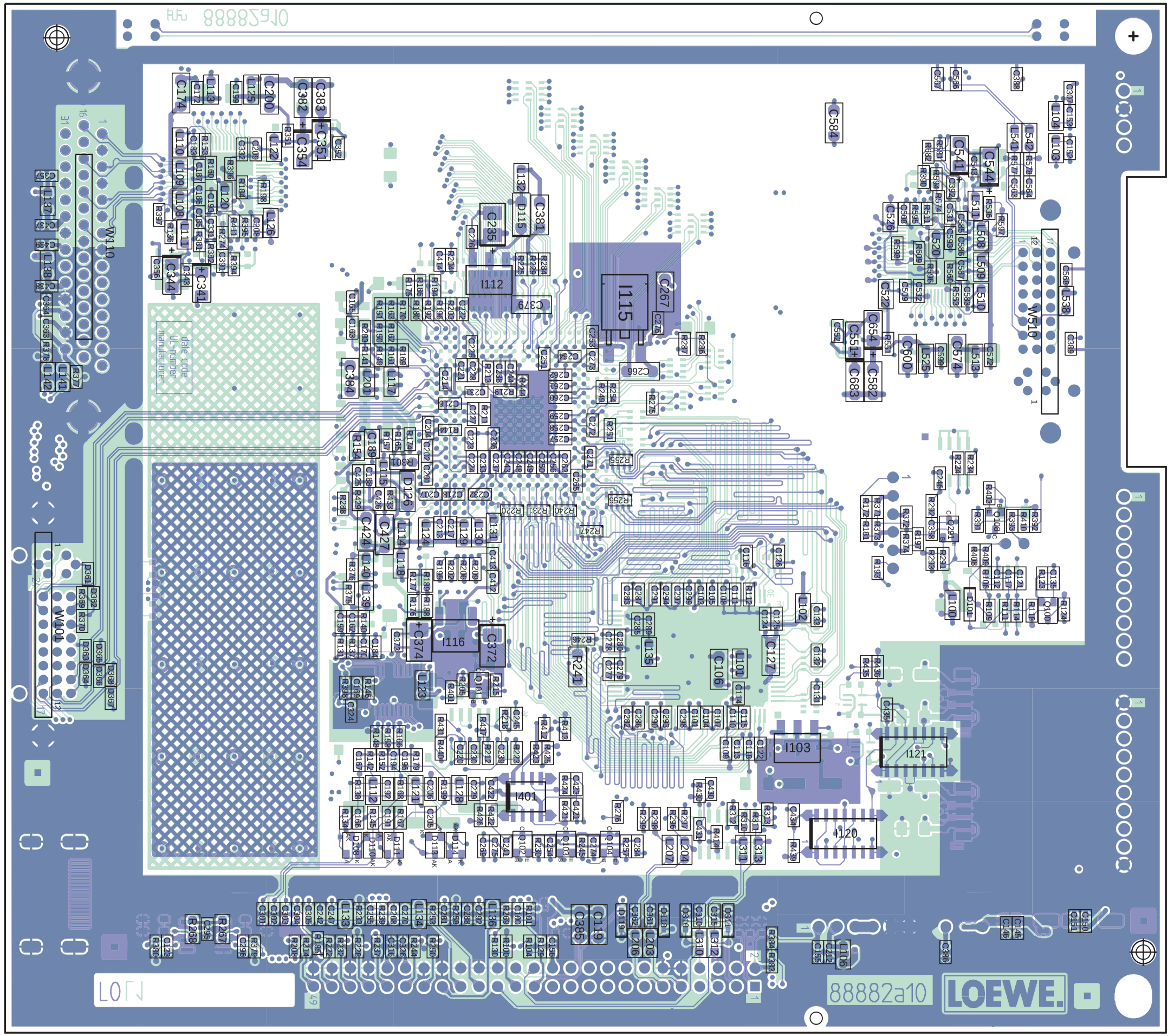

Lpl. Scaler Board 88882A Lötseite • **Scaler Board P.C.B 88882A** Solder side

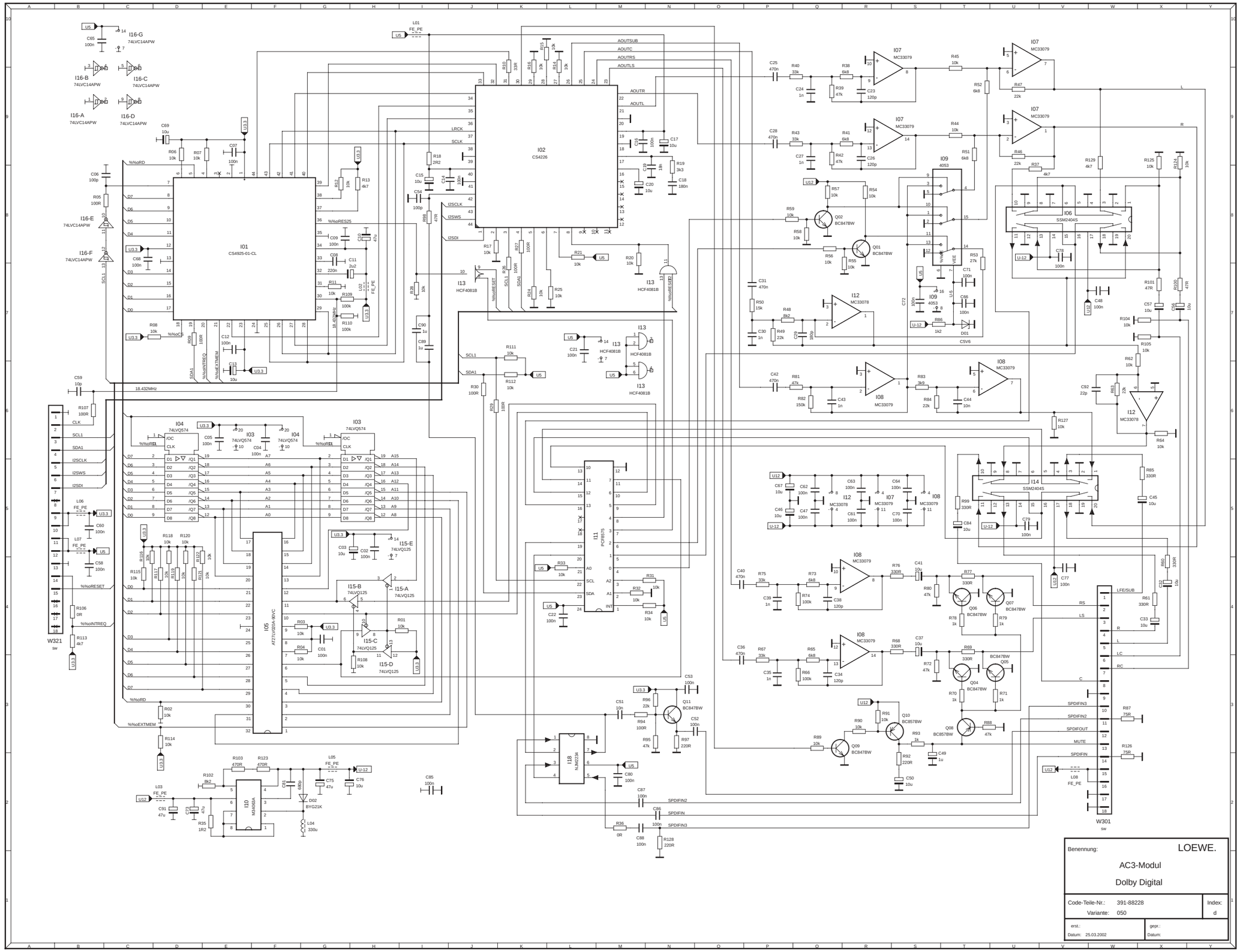
Benennung:
LOEWE.
AC3-Modul
Dolby Digital
Code-Teile-Nr.: 391-88228
Variante: 050
Index: d
erst.:
Datum: 25.03.2002
gepr.:
Datum:

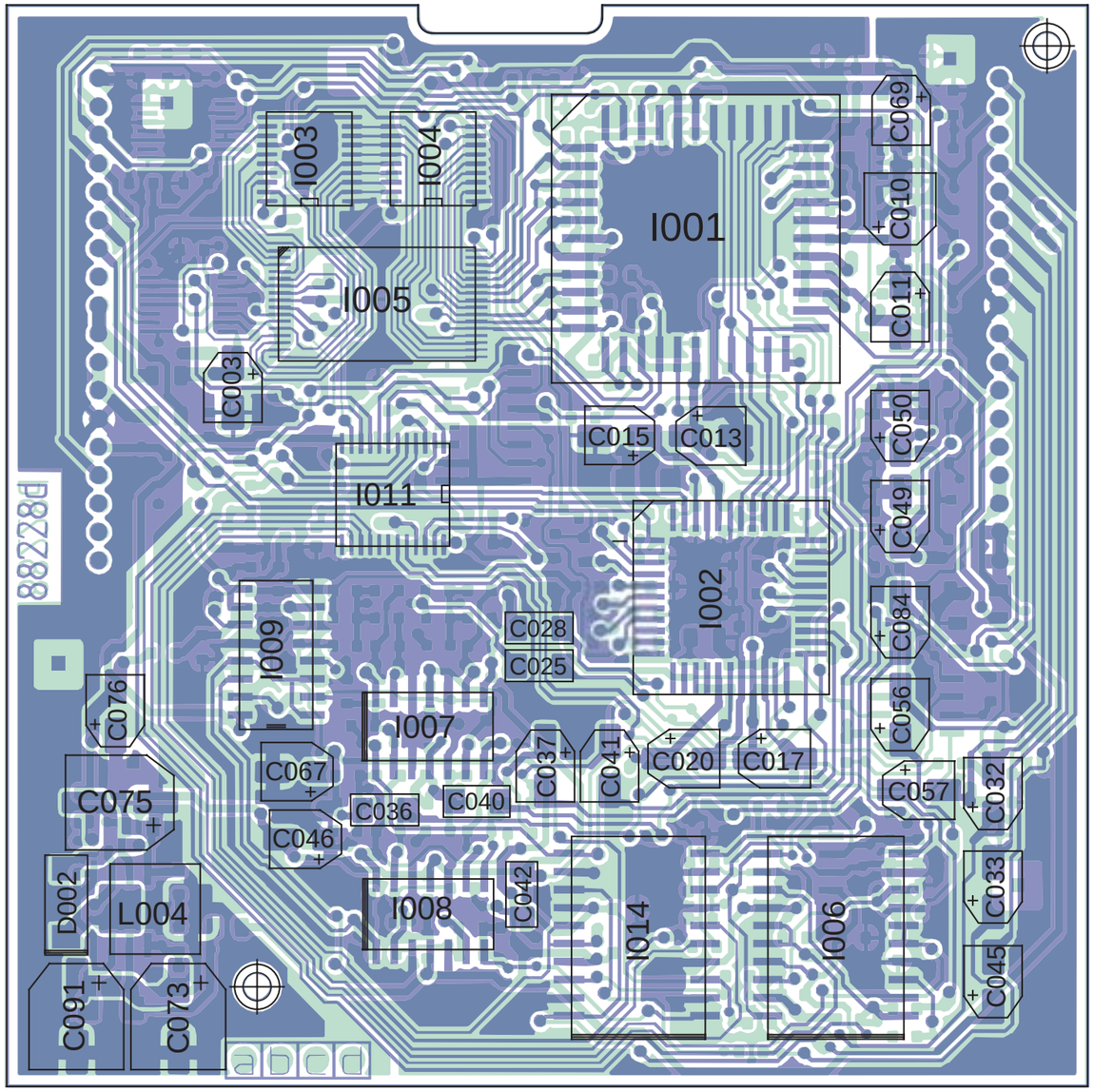

Lpl. AC3 88228D Bestückungsseite • **AC3 P.C.B 88228D** Components side

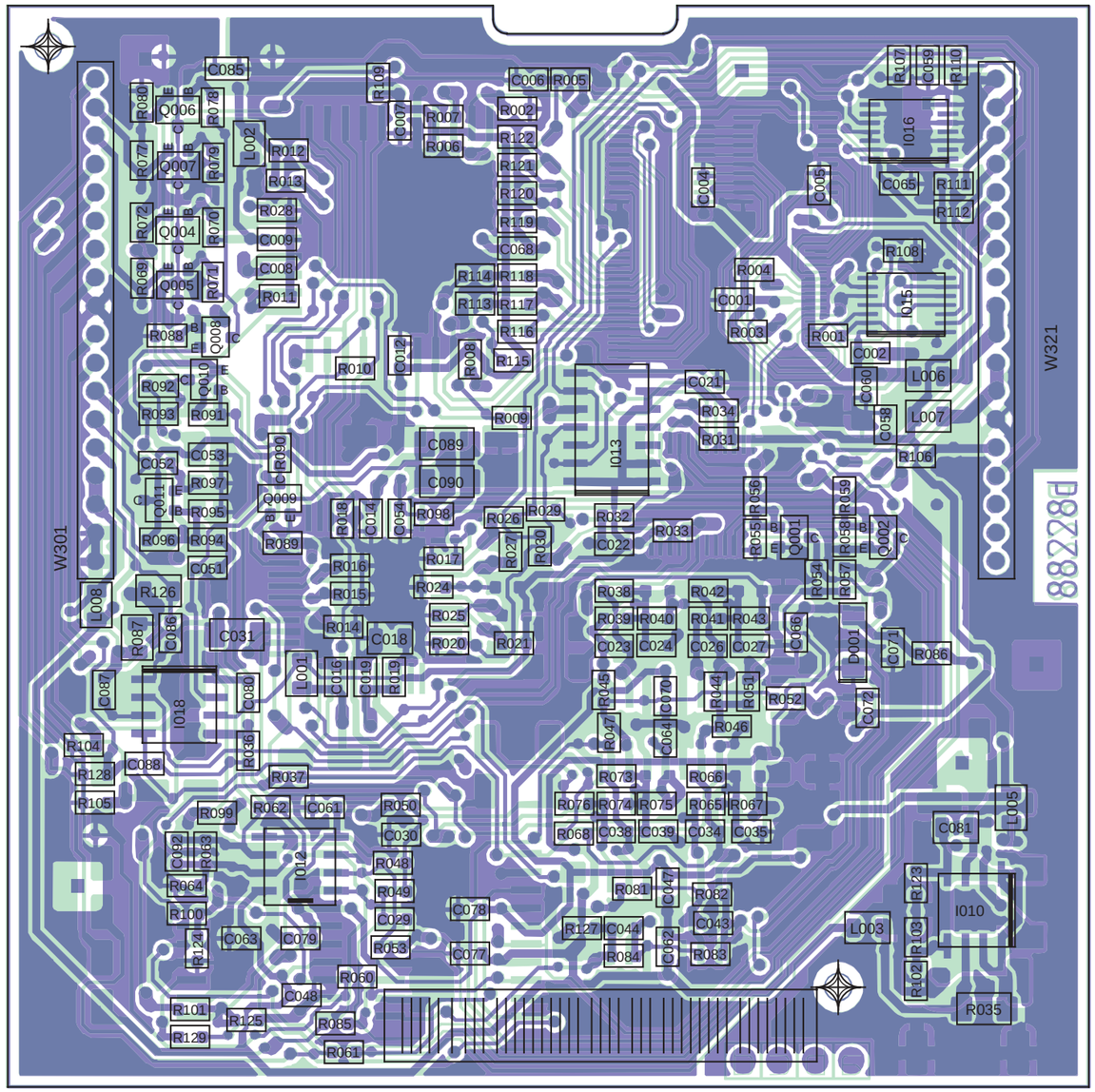

Lpl. AC3 88228D Lötseite • **AC3 P.C.B 88228D** Solder side

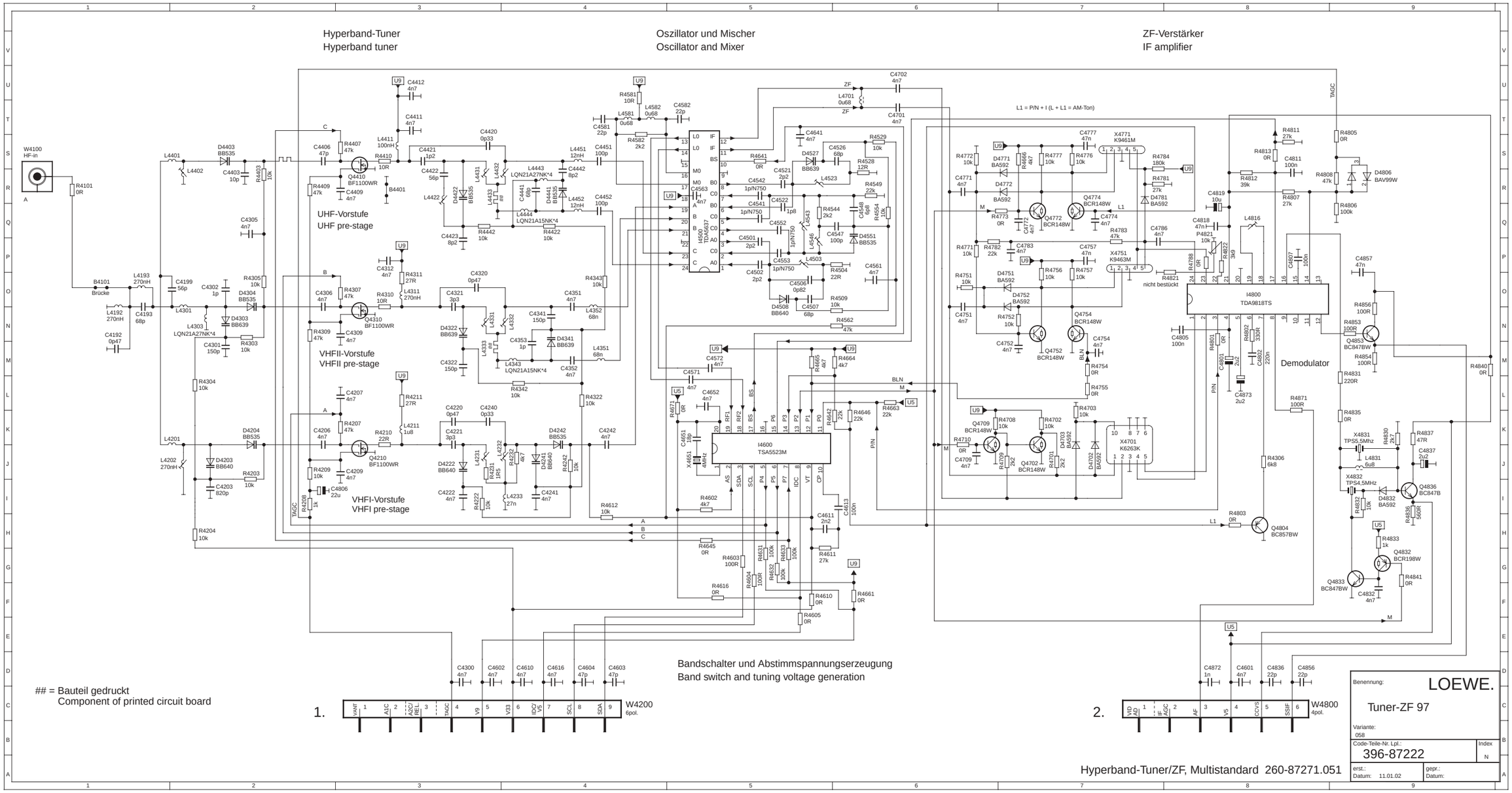
Hyperband-Tuner
Hyperband tuner
Oszillator und Mischer
Oscillator and Mixer
ZF-Verstärker
IF amplifier
UHF-Vorstufe
UHF pre-stage
VHFII-Vorstufe
VHFII pre-stage
VHFI-Vorstufe
VHFI pre-stage
L1 = P/N + I (L + L1 = AM-Ton)
Demodulator
nicht bestückt
Bandschalter und Abstimmspannungserzeugung
Band switch and tuning voltage generation
= Bauteil gedruckt
Component of printed circuit board
1.
W4200
6pol.
2.
W4800
4pol.
I4600
TSA5523M
I4800
TDA9818TS
Benennung:
LOEWE.
Tuner-ZF 97
Variante:
068
Code-Teile-Nr. Lpl.:
396-87222
Index
N
erst.:
Datum: 11.01.02
gepr.:
Datum:
Hyperband-Tuner/ZF, Multistandard 260-87271.051

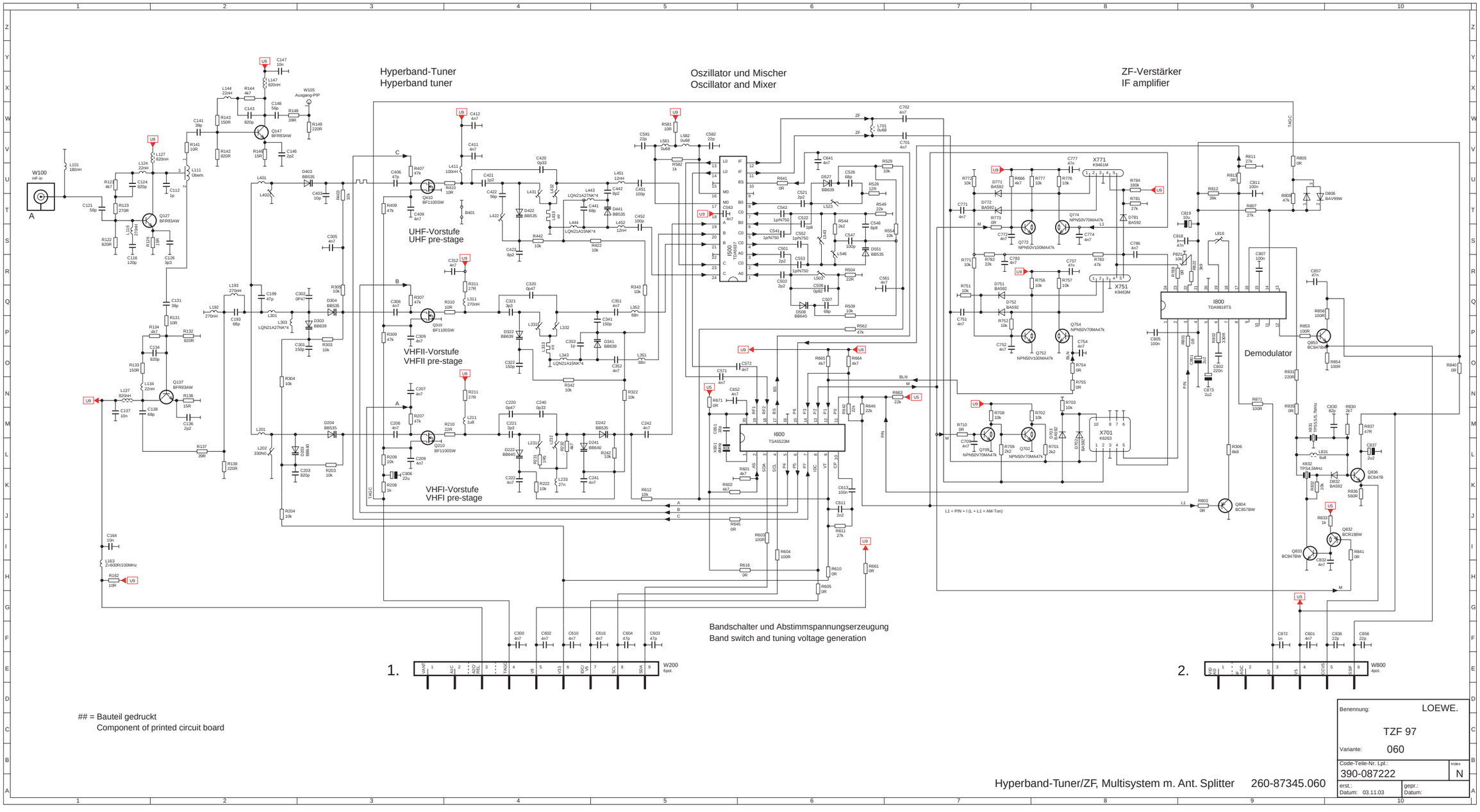

Benennung: LOEWE.

TZF 97

Variante: 060

Code-Teile-Nr. Lpl.: 390-087222

Index: N

erst.: Datum: 03.11.03

gepr.: Datum:

Hyperband-Tuner/ZF, Multisystem m. Ant. Splitter 260-87345.060

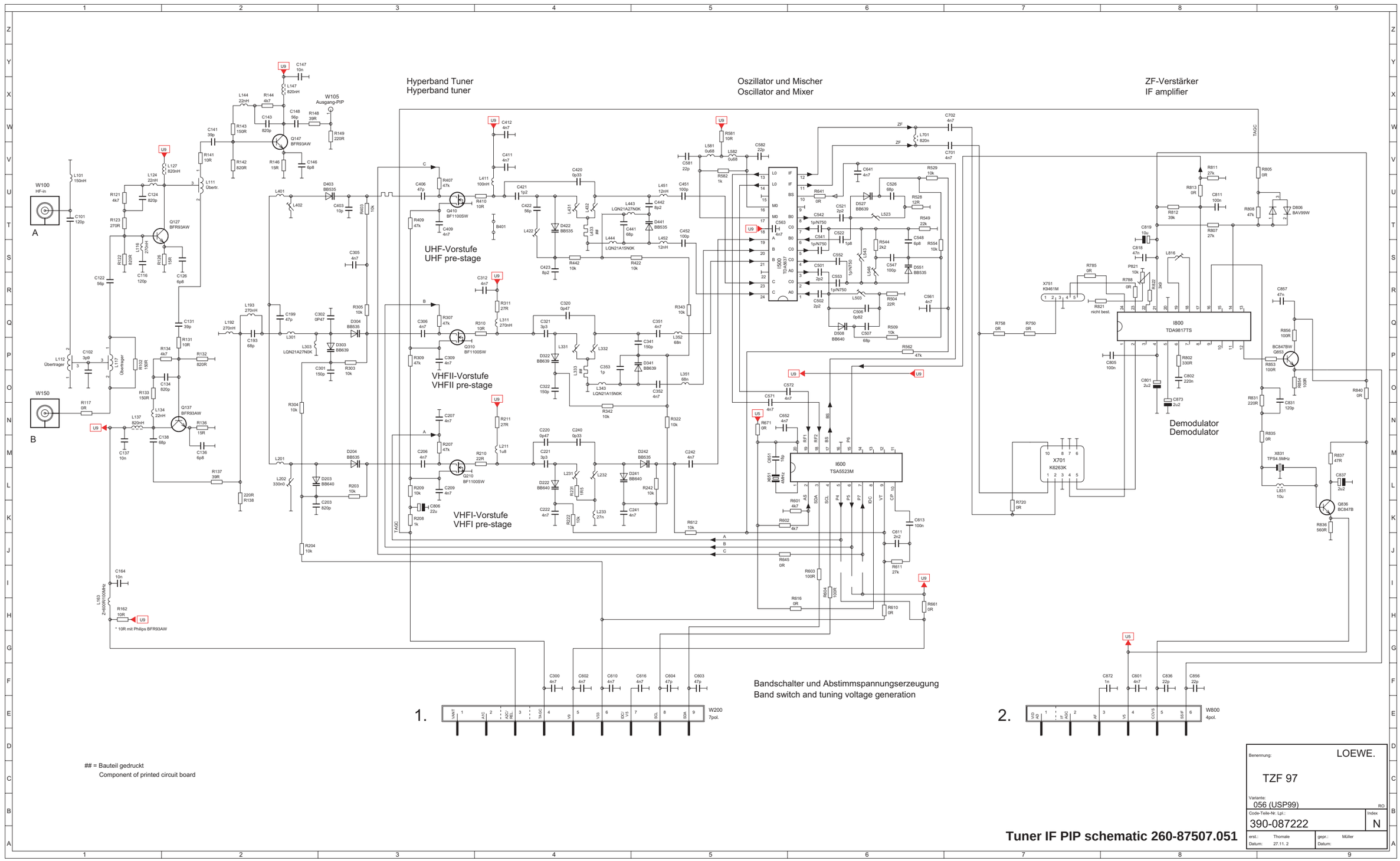
Hyperband Tuner
Hyperband tuner
UHF-Vorstufe
UHF pre-stage
VHFII-Vorstufe
VHFII pre-stage
VHFI-Vorstufe
VHFI pre-stage
Oszillator und Mischer
Oscillator and Mixer
I500
TDA5650
I600
TSA5523M
ZF-Verstärker
IF amplifier
I800
TDA9817TS
Demodulator
Demodulator
X701
K6263K
X751
K9461M
X831
TPS4.5MHz
W100
HF-in
A
W150
B
W105
Ausgang-PIP
1.
W200
7pol.
2.
W800
4pol.
Bandschalter und Abstimmspannungserzeugung
Band switch and tuning voltage generation
* 10R mit Philips BFR93AW
= Bauteil gedruckt
Component of printed circuit board
Benennung:
LOEWE.
TZF 97
Variante:
056 (USP99)
RO
Code-Teile-Nr. Lpl.:
390-087222
Index
N
erst.: Thomale
Datum: 27.11. 2
gepr.: Müller
Datum:
Tuner IF PIP schematic 260-87507.051

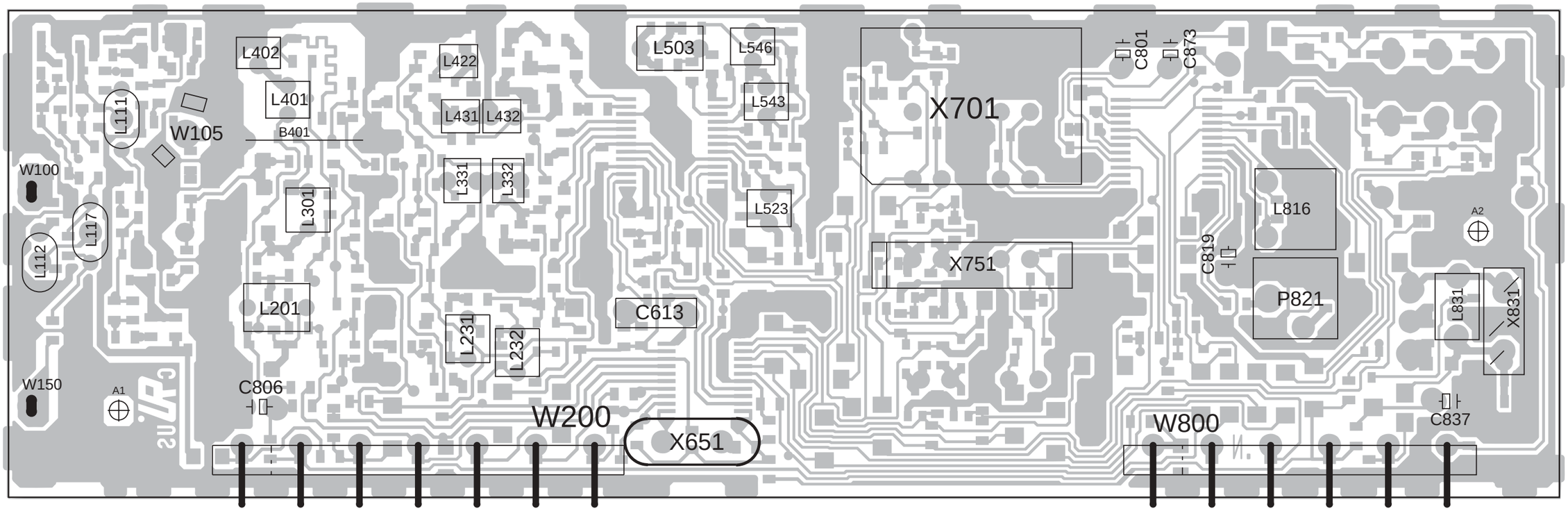

Tuner/IF P.C.B 87222N Components side

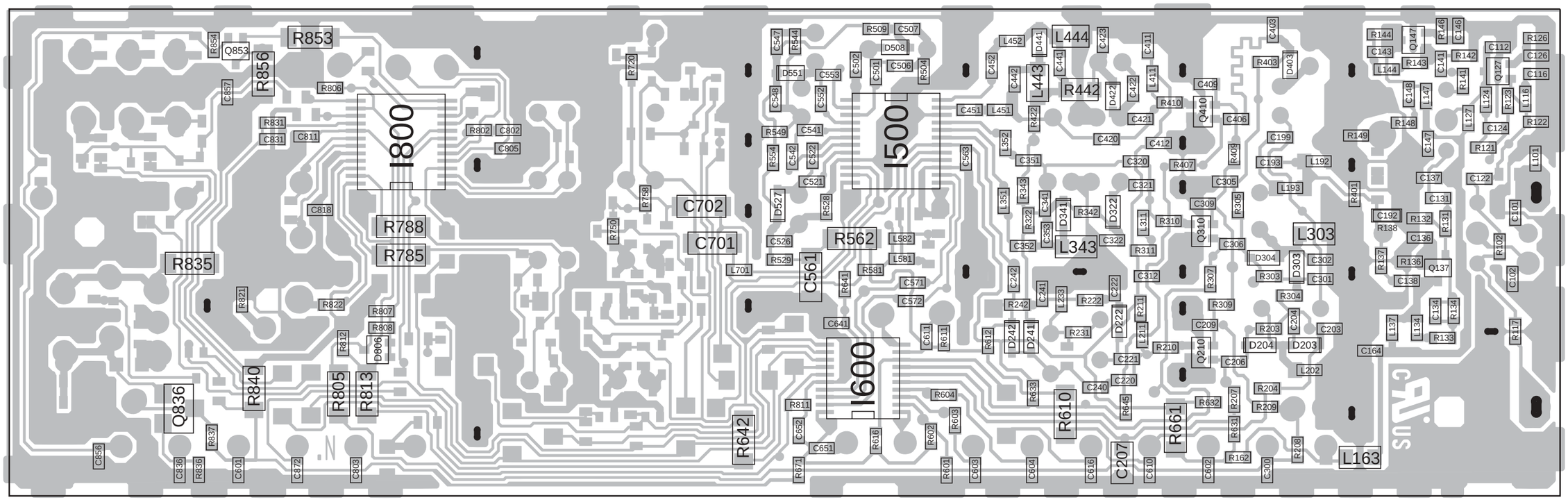

Tuner/IF P.C.B 87222N Solder side

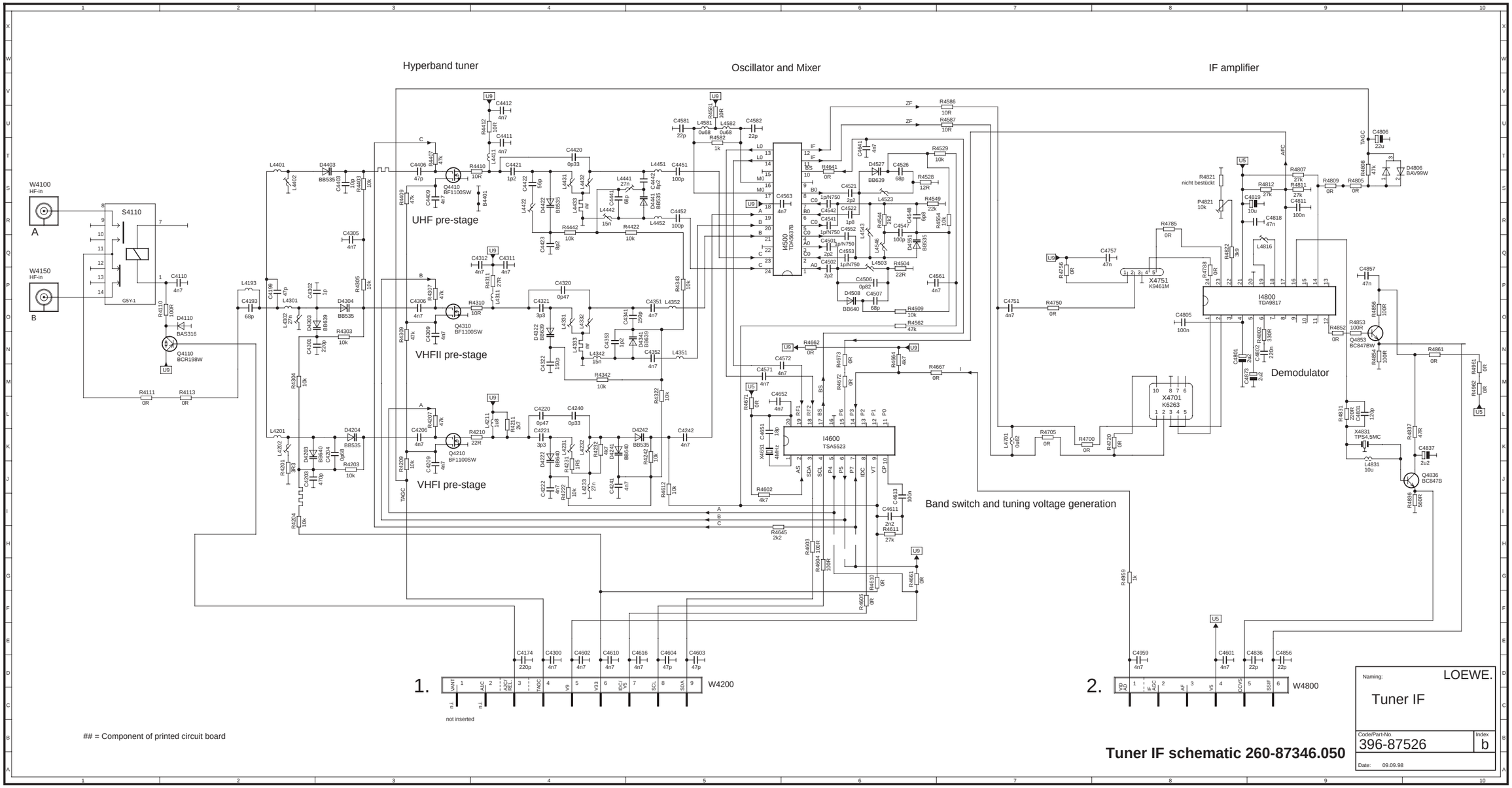
Hyperband tuner
Oscillator and Mixer
IF amplifier
UHF pre-stage
VHFII pre-stage
VHFI pre-stage
Demodulator
Band switch and tuning voltage generation
W4100
HF-in
A
W4150
HF-in
B
S4110
GSY-1
I4500
TDA5637B
I4600
TSA5523
I4800
TDA9817
X4701
K6263
X4751
K9461M
X4831
TPS4.5MC
Q4410
BF1100SW
Q4310
BF1100SW
Q4210
BF1100SW
Q4410
BCR198W
Q4853
BC847BW
Q4836
BC847B
1.
W4200
not inserted
2.
W4800
= Component of printed circuit board
Tuner IF schematic 260-87346.050
LOEWE.
Naming:
Tuner IF
Code/Part-No.
396-87526
Index
b
Date:
09.09.98

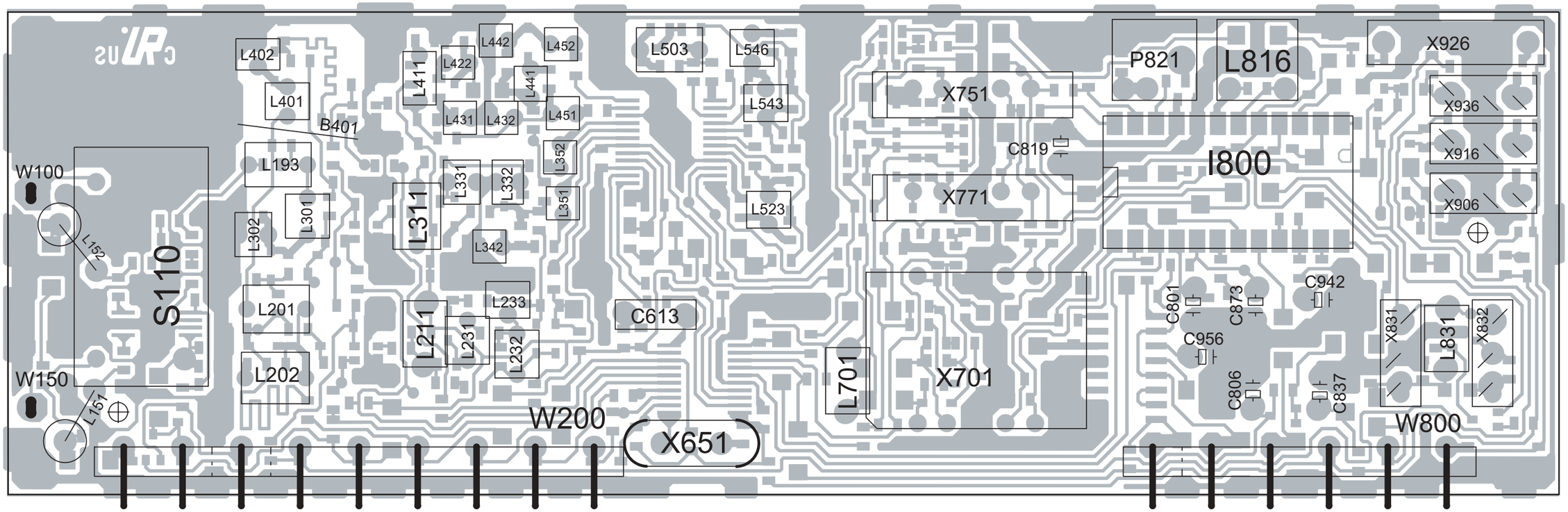

Tuner/IF P.C.B. 87526B Components side

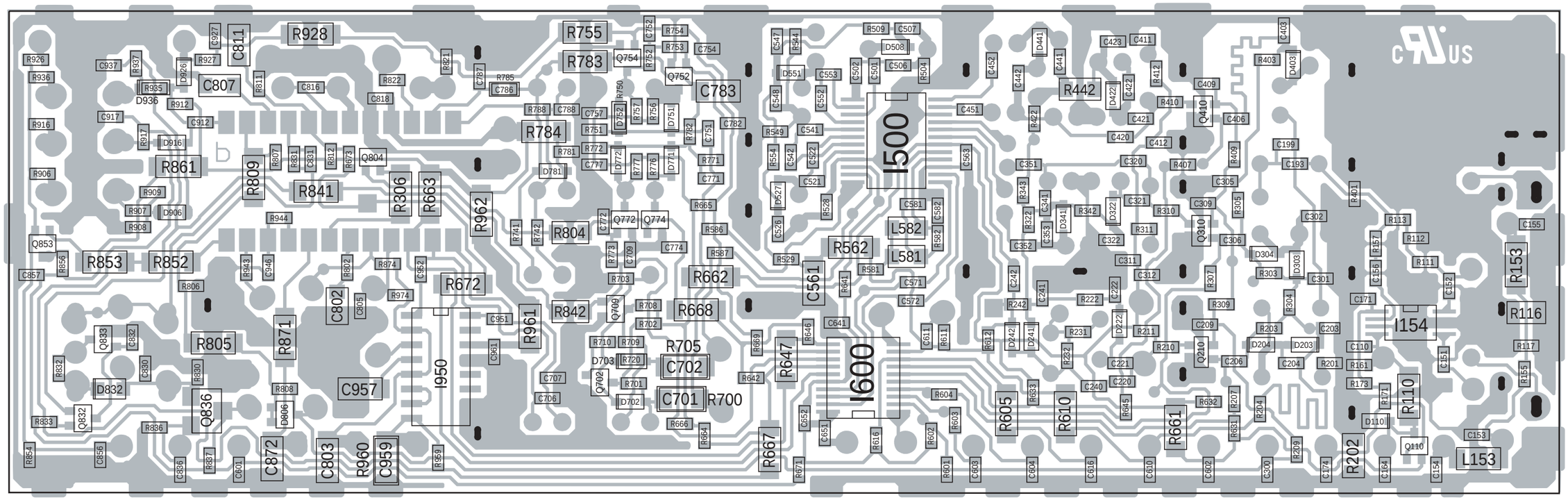

Tuner/IF P.C.B. 87526B Solder side

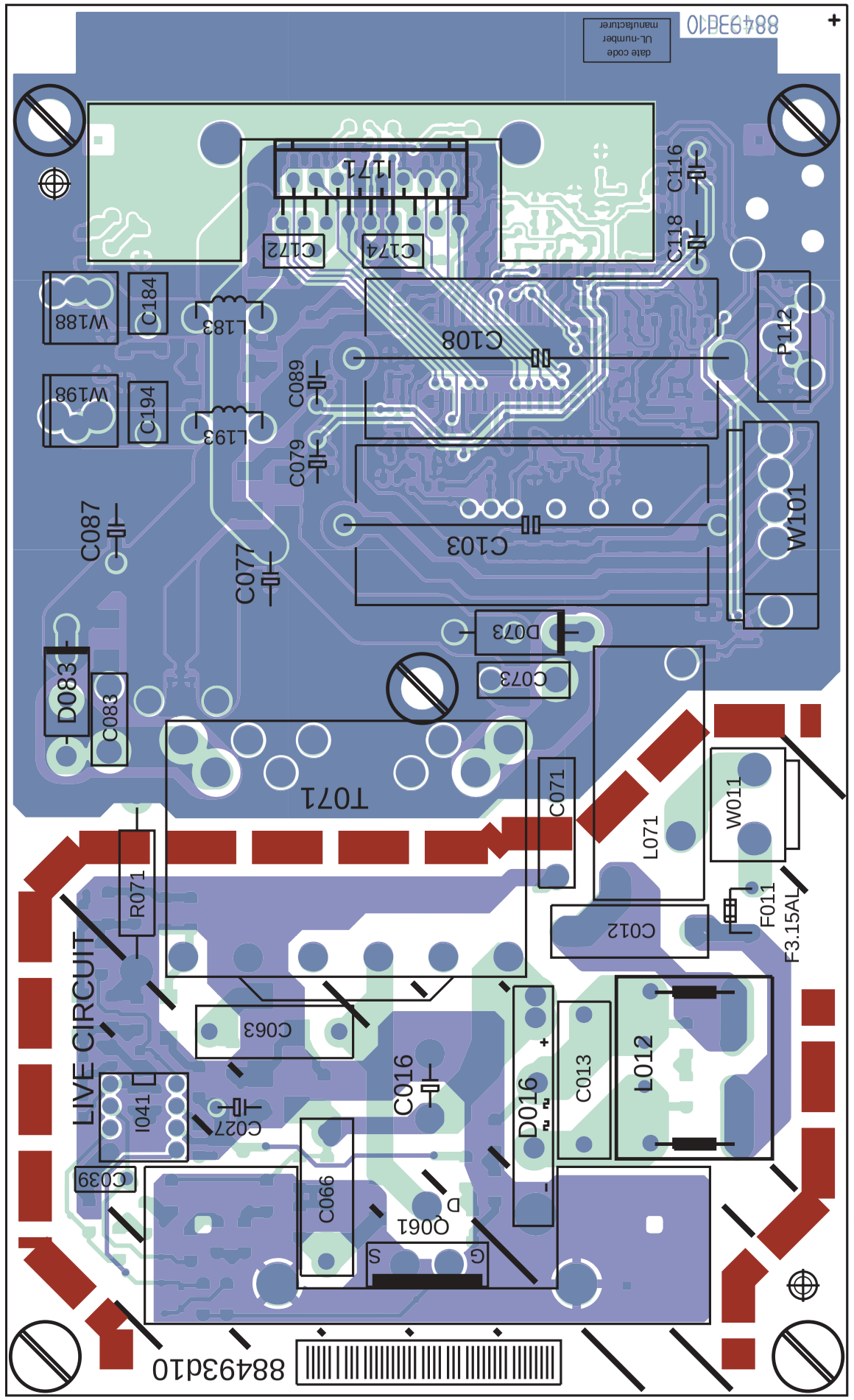

Lpl. Baß-Endstufe 88493D Bestückungsseite • **Bass Power Amplifier P.C.B 88493D** Components side

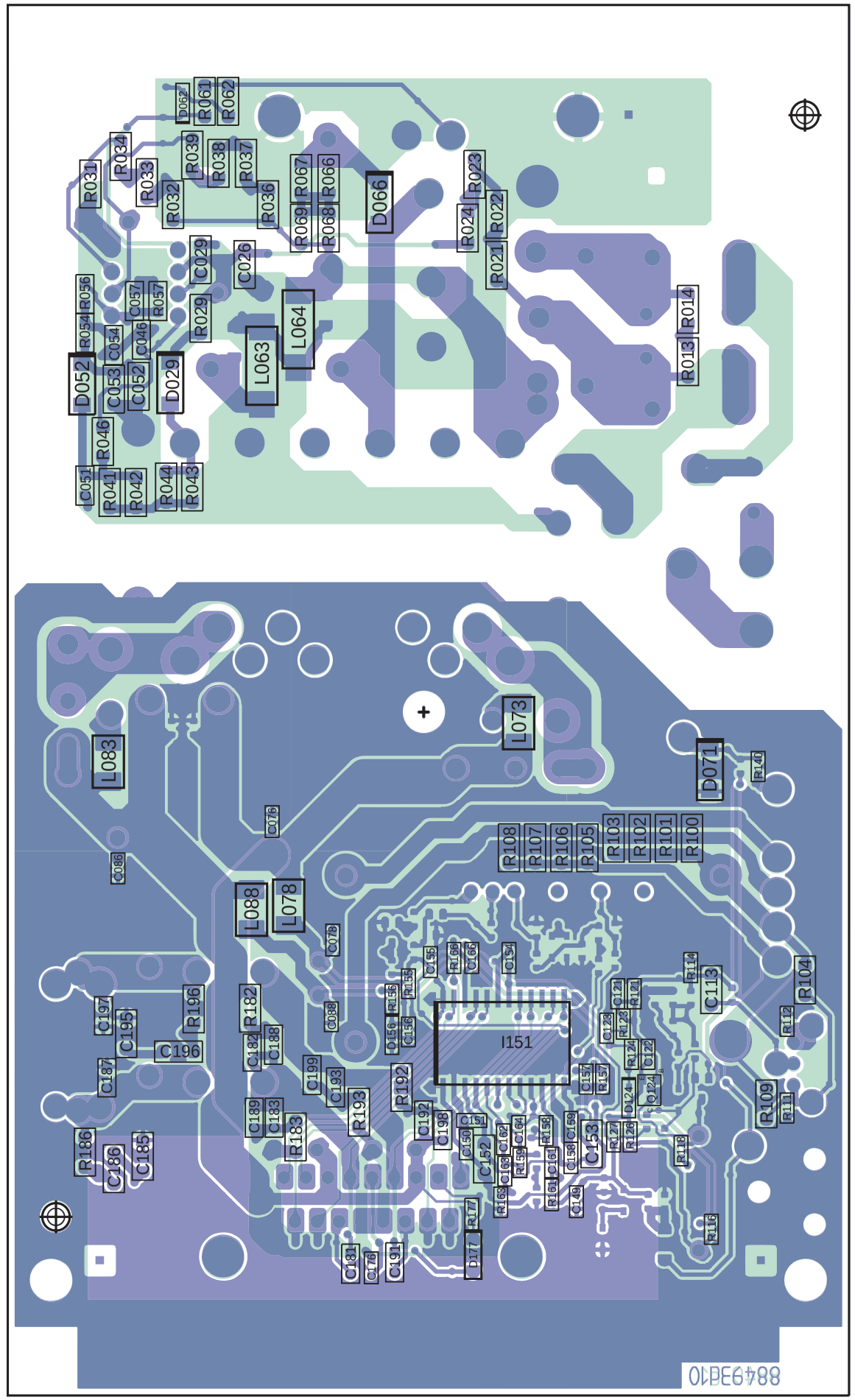

Lpl. Baß-Endstufe 88493D Lötseite • **Bass Power Amplifier P.C.B 88493D** Solder side

I2051
MSP3411
MSP
I2161
SAA4955HL
I2171
SAA4955HL
I2151
VPC3233D
PIP - VPC
I2271
VPC3230D
MAIN - VPC
CS
I2421
SAA4998
I2311
SAA4979/108
BESIC
I2801
SDA6000
CCU
I2921
29LV320D
Flash 32MBit
I2916
K4S641632D
SDRAM 64MBit
I2601
DDP3315C
DDP
G3
Power
Audio TVO/ATSC
TVO-int
Audio In
VGA
(AC3-Modul)
DIS
DVB/
ATSC
TVO
HDTV(ATSC)
VIDEO1
Scaler Board
TVO-int
ATSC
SC3 3DTV
DVB
Netzteil
B-Prog.
Service
Drehfuss
RC5/6 - Buchse
IR-Buchse
Würfelstecker
TVO-int
Rear Board
Rear Board
Rear Board
Rear Board
PIP
Main
Sat6
Sat6 / DVB-T
= Digital GND
= NF GND
= GND
22.10.03 Ex / 30.10.03
Benennung:
LOEWE.
Signal-Board S-Box
Code-Teile-Nr.: 624/393-88557
Variante: R2550 055
Index: E
erst.: J.Heidenreich
Datum: 22.10.2003
gepr.: A.Hofmann
Datum:

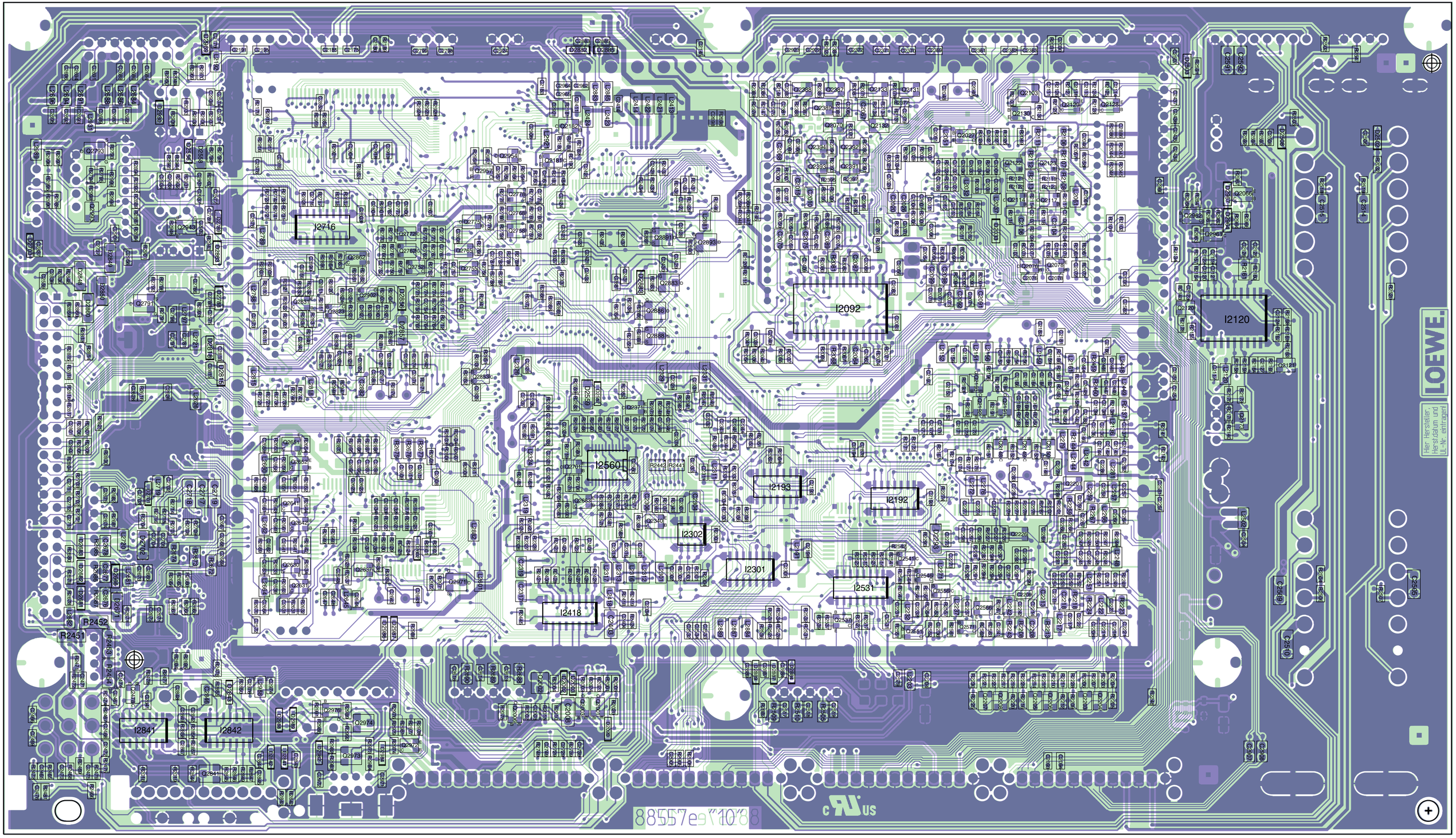

Lpl. 88557E Signal Board 88557E Lötseite • **Signal Board P.C.B 88557E** Solder side

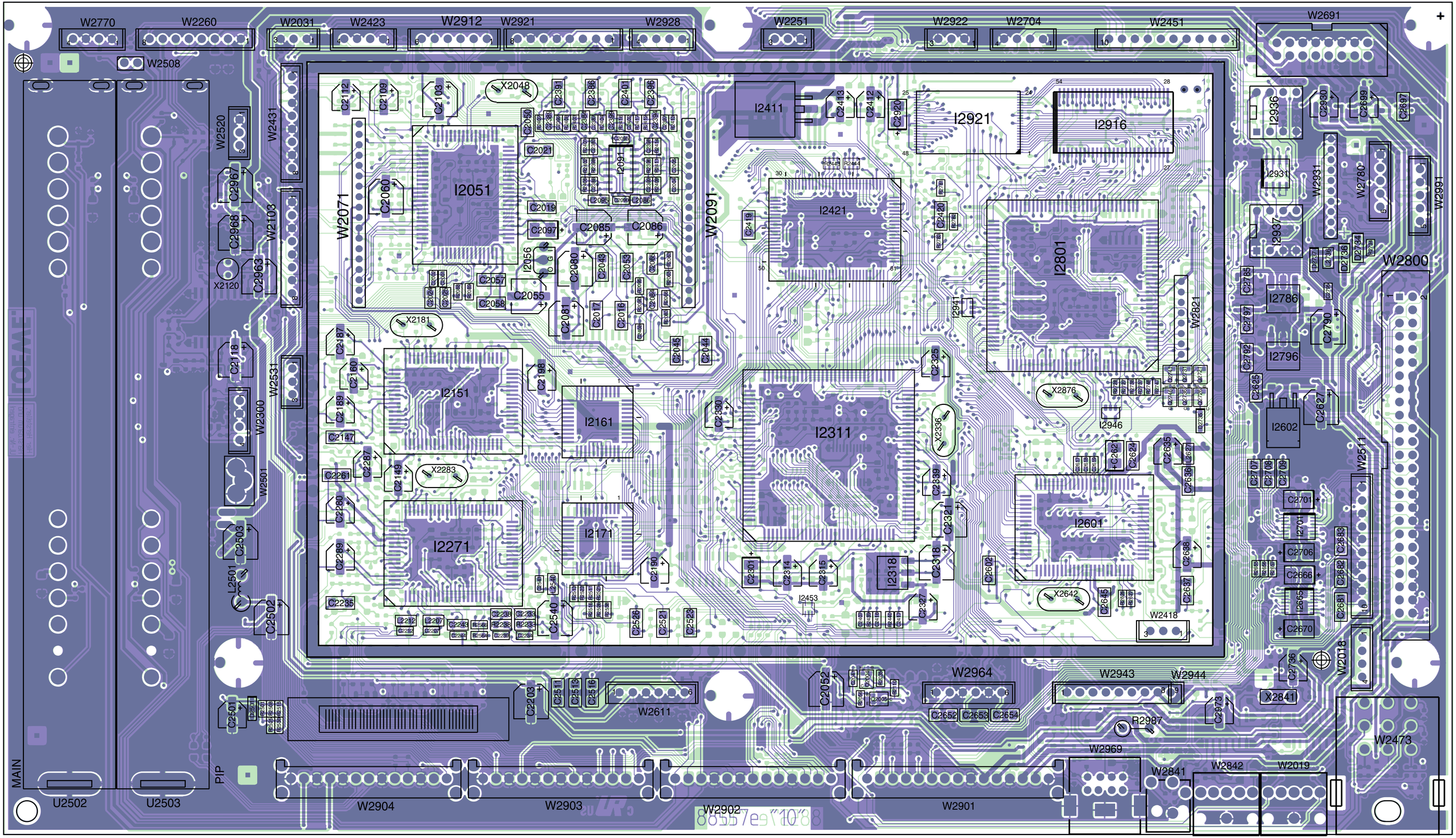

Lpl. 88557E Signal Board 88557E Bestückungsseite • **Signal Board P.C.B 88557E** Components side

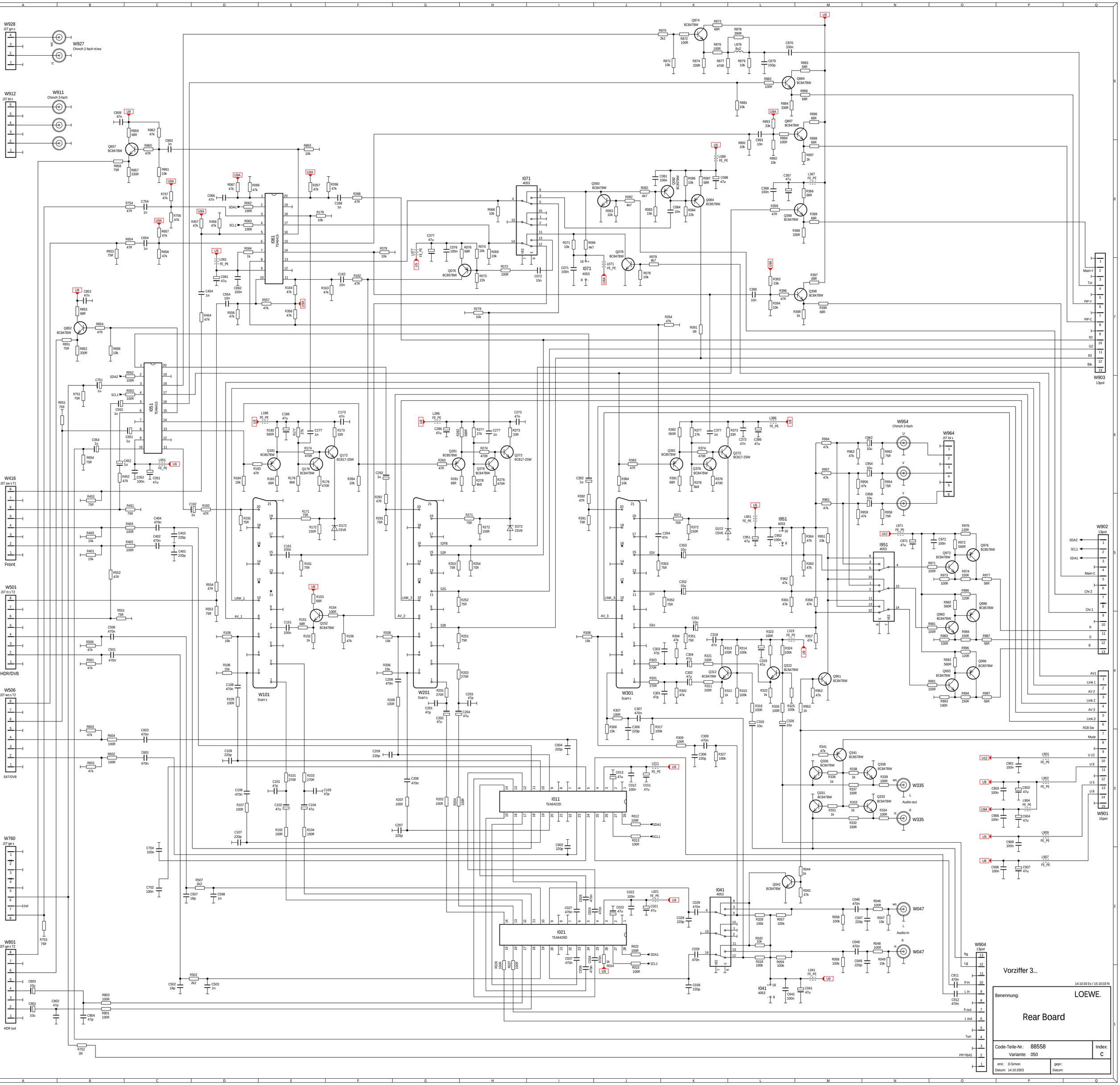

W928
JST gn s
W927
Chinch 2-fach rt/ws
W912
JST bl s
W911
Chinch 3-fach
W416
JST sw s T1
Front
W501
JST rt s T2
HDR/DVB
W506
JST ws s T2
SAT/DVB
W760
JST ge s
W801
JST ge s T2
HDR out
W101
Scart s
W201
Scart s
W301
Scart s
W954
Chinch 3-fach
W964
JST bl s
W902
13pol
W903
13pol
W901
15pol
W904
13pol
W335
Audio out
W047
Audio in
I061
TEA6415
I051
TEA6415
I071
4053
I011
TEA6422D
I021
TEA6420D
I041
4053
I951
4053
Vorziffer 3...
14.10.03 Ex / 15.10.03 Ri
Benennung:
LOEWE.
Rear Board
Code-Teile-Nr.: 88558
Variante: 050
Index: C
erst.: D.Simon
Datum: 14.10.2003
gepr.:
Datum:

Netzteil
Power Supply

Netzspannungs-Potential
Supply voltage potential

Geräte-Potential (erdfrei)
Set potential (off ground)

Benennung:	LOEWE.
RPTV-Basic-Board	
Basic Board	
Code-Teile-Nr.: 391 - 88633	Index: C
Variante: 050	
erst.: Datum: 20.11.2003	gepr.: Datum:

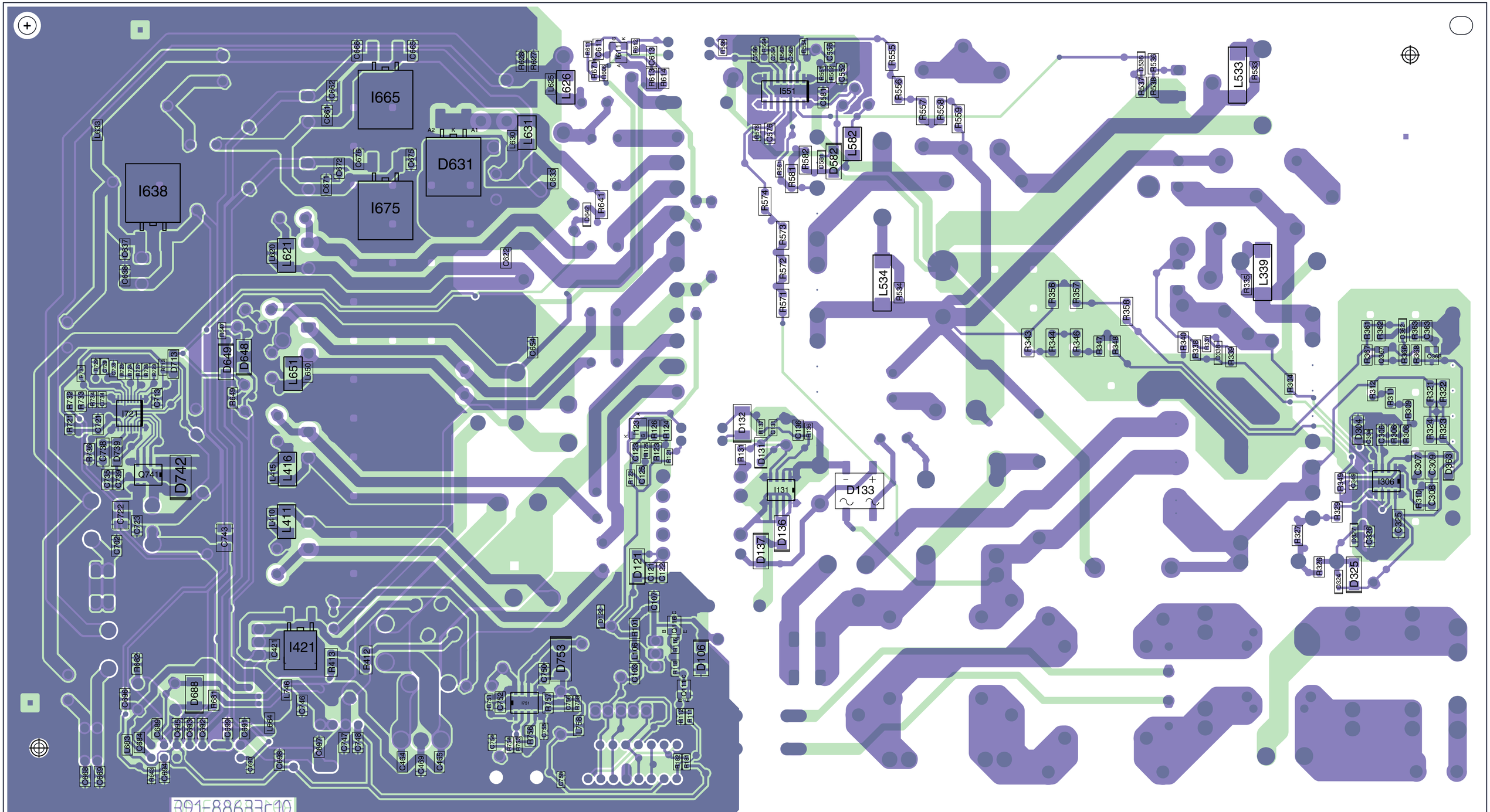

Lpl. Basic Board RPTV 88633C Lötseite • **Basic Board RPTV P.C.B 88633C** Solder side

Fuses:

F133	F2.5A	L 250V
F411	F3.15A	L 250V
F416	F3.15A	L 250V
F511	T3.15A	H 250V
F621	F4.0A	L 250V
F626	F3.15A	L 250V
F631	F3.15A	L 250V
F650	F4.0A	L 250V
F651	F4.0A	L 250V
F661	F1.0A	L 250V
F751	F1.0A	L 250V

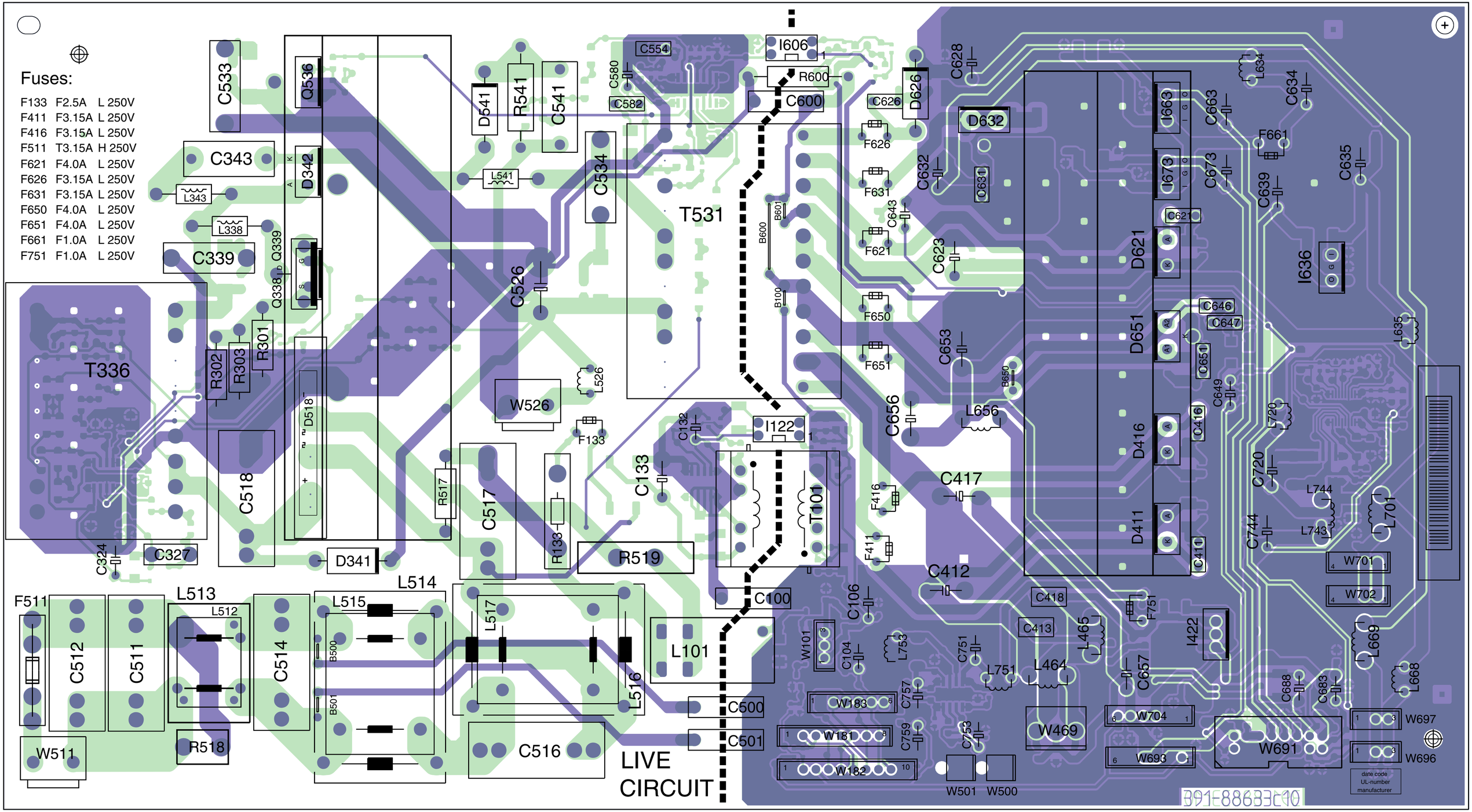

Lpl. Basic Board RPTV 88633C Bestückungsseite • **Basic Board RPTV P.C.B 88633C** Components side

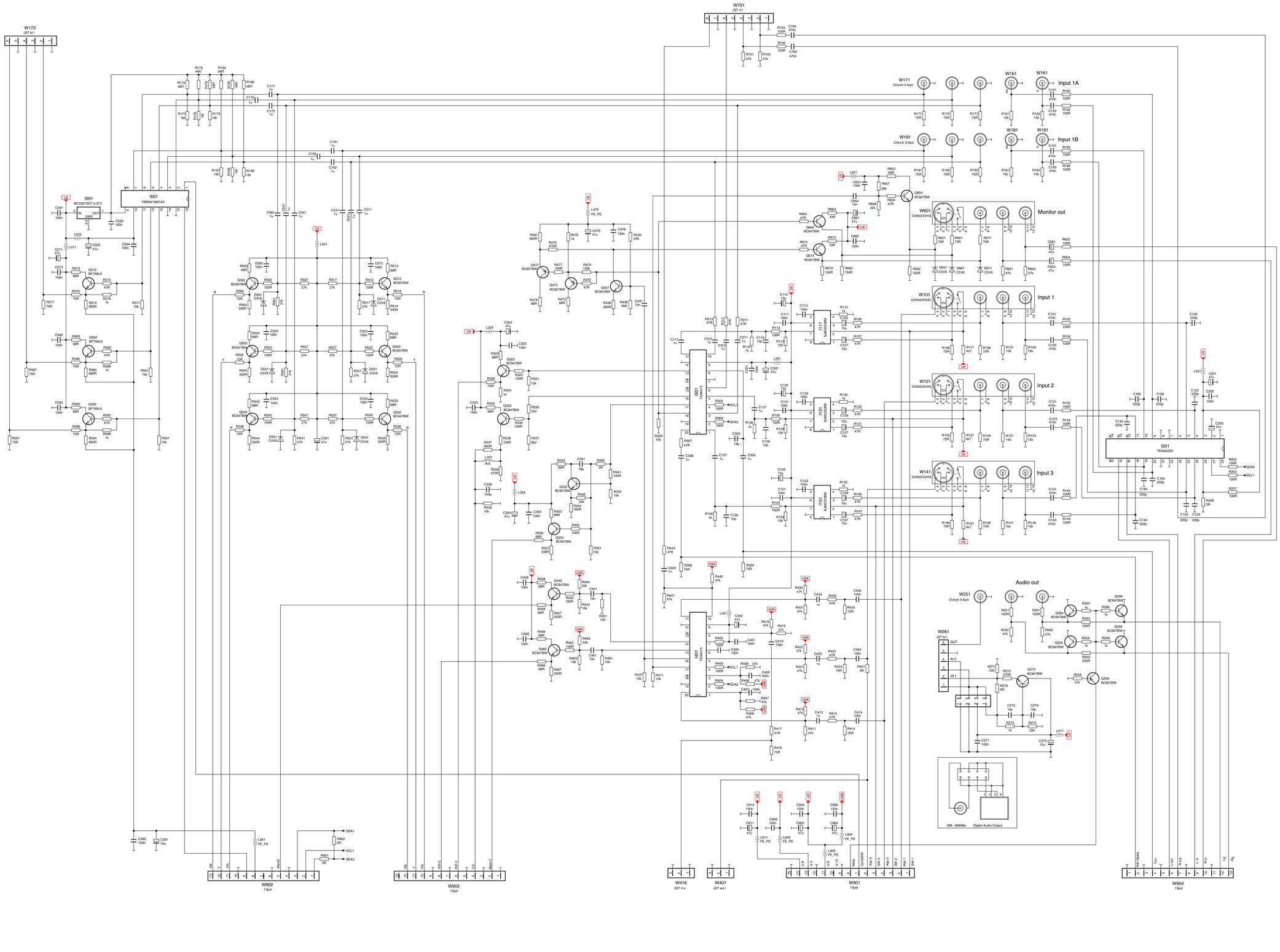

Benennung:	LOEWE.
	Rear-Board USA
Code-Teile-Nr.: 88681	Index: C
Variante: 050	
erst.: Datum: 29.07.2003	gepr.: Datum:

W101 JST bl l
L101 150u
C101 100n
C102 100n
C103 470u
U15
CPU_GO
U12 U5 U3V3
D113 nicht bestückt
D114
D115 nicht bestückt
R113 1k
R114 1k
R115 1k
R111 1k
R112 1k
Q116 BC847BW
R116 56k
C116 100n
R132 82k
R133 3k3
R131 100k
R135 0R
R126 0R
C137 470p
R137 22k
C136 100p
C149 100p
R138 4M7
I131 LTC1778
VFB Ion SGND ITH FCB VRNG PGOOD RUNSS
EXTVcc Vin INTVcc BG PGND SW TG BOOST
R139 1R
D142 LL103C
C141 100n
C142 4u7
Q147 BSO4822
Q146 BSO4822
C143 100n
C144 100n
D147 BYG21K
L147 22n
C147 100n
C146 100u
R149 12k
R148 18k/1%
R147 100k/1%
C148 1000u/16V
R117 56k
C117 100n
R153 430R/1%
R152 82k
R157 22k
C157 470p
R155 0R
R127 0R
C156 100p
C169 100p
R158 2M2
LTC1778 I151
R159 1R
D162 LL103C
C161 100n
C162 4u7
Q166-1 FDS8936A
Q166-2 FDS8936A
C163 100n
C164 100n
D167 BYG21K
L167 150u
C167 100n
C166 100u
R169 18k/1%
R168 18k/1%
R167 47k/1%
C168 1000u/16V
R118 56k
C118 100n
R172 39k
R173 10k
R175 0R
R128 0R
C177 470p
R177 22k
C176 100p
C189 100p
R182 820k
R178 820k
I171 LTC1778
R179 1R
D182 LL103C
C181 100n
C182 4u7
Q187 BSO4420
Q186 BSO4420
C183 100n
C184 100n
D187 BYG21K
L187 4u7
C187 100n
C186 100u
R188 15k/1%
R187 47k/1%
C188 1000u/16V
R121 10R
PWRGOOD
R/W_E2PROM
R297 0R
LL_OK
OEL_OK
R/W_E2PROM
TEMP_ST
W391-2 NDS128-002-BS
R/W_E2PROM
64B 63B 62B 61B 60B 59B 58B 57B 56B 55B 54B 53B 52B 51B 50B 49B 48B 47B 46B 45B 44B 43B 42B 41B 40B 39B 38B 37B 36B 35B 34B 33B 32B 31B 30B 29B 28B 27B 26B 25B 24B 23B 22B 21B 20B 19B 18B 17B 16B 15B 14B 13B 12B 11B 10B 9B 8B 7B 6B 5B 4B 3B 2B 1B
1G7 1G6 1G5 1G4 1G3 1G2 1G1 1G0 1R7 1R6 1R5 1R4 1R3 1R2 1R1 1R0 1B7 1B6 1B5 1B4 1B3 1B2 1B1 1B0
R331 MCLK 0R
ACTDATA
MHSYNCZ
MVSYNCZ
SYNCVAL
I271 PCF8574TS
P0 P1 P2 P3 P4 P5 P6 P7
R283 0R
R281 0R
L272
C271 100u
C272 100n
R287 0R
R293 10R
R298 4k7
SDA4_3V3
SCL4_3V3
R277 47R
R276 47R
I346 LM2903D
C346 100n
W341 JST ws l
C341 100n
R341 180R
R343 33k
R342 1k
C342 10n
R346 10k
R348 100k
R347 10k
R349 1k
R399 10R
R398 10R
SDA4_5V
SCL4_5V
CW_INDEX
PWRGOOD
TCSG7
LAMPLITZ
LAMP_EN
W351 JST bl l
to Ballast
C351 10n
R351 1k
C352 10n
I356-A 74LVC14APW
I356-B 74LVC14APW
C357 10n
R357 4k7
R359 4k7
I361-C LM2902-M
R368 56k
R369 10k
C369 10n
C367 100n
R367 10k
TEMP
PWM0
R397 4k7/1%
PWM1
R376 100k
R374 22k
D376 BAS316
Q376 BC847B
I361-B LM2902-M
R371 10k
C371 100n
R384 100k
C384 100n
D383 BAS316
D382 BAS316
R381 10k
C382 100n
L381
L378
C381 10n
C378 100n
W381 JST ws l
Lampen-Lüfter
Q372 BC847BW
R372 1k
D372
R373 10k
W102 JST ws l
NTC
L361
C361 100n
R361 470k
R362 47R
C362 100n
R363 2k2
R392 4k7/1%
C391 100u
R263 100k
R264 22k
R261 100k
C261 100n
D262 BAS316
Q261 BC847B
I361-A LM2902-M
R265 10k
SCALER_PWM
D263 BAS316
D261 BAS316
R262 10k
C262 100n
L261
L262
C263 10n
C264 100n
I361-D LM2902-M
W382 JST ws l
Optical Engine-Lüfter
W392 JST ws s
DMD-Lüfter
Q392 BC847B
D392 BAS316
R353 3k9
R354 4k7
C392 100n
C393 100u
C394 100n
C395 100n
C397 100u
C398 100n
C399 100n
I336-B 74AC04
I336-C 74AC04
I336-D 74AC04
I336-E 74AC04
I336-F 74AC04
I336-G 74AC04
I361-E LM2902-M
C336 100n
C366 100n
C356 100n
I356-C 74LVC14APW
I356-D 74LVC14APW
I356-E 74LVC14APW
I356-F 74LVC14APW
I356-G 74LVC14APW
U5 U15 U3V3
W310 1k
R311 1k
SCL4_5V
SDA4_5V
C320 100n
I331 P82B715
C321 47p
C322 47p
Q310 SN7002
Q311 SN7002
R314 12k
R319 12k
R317 1k
R318 1k
SCL4_3V3
SDA4_3V3
L213
C213 100u
C212 100n
L211
C211 100n
L209
C209 100n
L214
C216 100u
L217
C217 100n
L218
C218 100n
C219 100n
L219
L221
C221 100n
L222
C222 100n
L223
C223 100n
L224
R241 4k7
R238 nicht best.
R242 10R
SCL4_3V3
OCLK/NV
R204 0R
R202 47k
C226 100u
R209 0R
R244 10R
SDA4_3V3
C224 100n
I201
Sil169
HS DJTR PD ST PXS SCDT PDO
R214 0R
R213 0R
R211 nicht best.
R212 0R
SCDT
R221-A 22R
R221-B 22R
R221-C 22R
R221-D 22R
R220-A 22R
R220-B 22R
R220-C 22R
R220-D 22R
R222-A 22R
R222-B 22R
R222-C 22R
R222-D 22R
R223-A 22R
R223-B 22R
R223-C 22R
R223-D 22R
R224-A 22R
R224-B 22R
R224-C 22R
R224-D 22R
L202
L201
C201 100n
C202 100n
L208
C208 100n
L207
C207 100n
L206
C206 100n
C204 100u
C203 100n
L203
CTL2 CTL1
R251 0R
R253 0R
I202-1 74LVC1G04
I202-2 74LVC1G04
C225 100n
R216 22R
R217 47R
MCLK
MHSYNCZ
MVSYNCZ
ACTDATA
I336-A 74AC04
I336-F 74AC04
R339 0R
SCDT
I203 ICRES2V7
VDD DS GND OUT
DVI
W110
DVI-Connector
Rx0- Rx0+ Rx1- Rx1+ Rx2- Rx2+ RxC- RxC+
C3 C5 C1 C4 C2 C5L1
C301 56p
C302 56p
C303 56p
R302 10R
R303 10R
PSU_ON_OFF
SCALER_PWM
SCL4_5V
SDA4_5V
L302 FE_PE
L303 FE_PE
C304 56p
C305 56p
C306 56p
C307 56p
C308 56p
C309 56p
EXT-RES
Rx0+ Rx0- Rx1+ Rx1- Rx2+ Rx2- RxC+ RxC- Rx0+ Rx0- Rx1+ Rx1- Rx2+ Rx2- RxC+ RxC-
R236 390R
C222 100n
C223 100n
L222
L223
L224
R241 4k7
R238 nicht best.
R242 10R
SCL4_3V3
OCLK/NV
R204 0R
R202 47k
C226 100u
R209 0R
R244 10R
SDA4_3V3
C224 100n
I203 ICRES2V7
VDD DS GND OUT
R214 0R
R213 0R
R211 nicht best.
R212 0R
SCDT
R221-A 22R
R221-B 22R
R221-C 22R
R221-D 22R
R220-A 22R
R220-B 22R
R220-C 22R
R220-D 22R
R222-A 22R
R222-B 22R
R222-C 22R
R222-D 22R
R223-A 22R
R223-B 22R
R223-C 22R
R223-D 22R
R224-A 22R
R224-B 22R
R224-C 22R
R224-D 22R
L202
L201
C201 100n
C202 100n
L208
C208 100n
L207
C207 100n
L206
C206 100n
C204 100u
C203 100n
L203
CTL2 CTL1
R251 0R
R253 0R
I202-1 74LVC1G04
I202-2 74LVC1G04
C225 100n
R216 22R
R217 47R
MCLK
MHSYNCZ
MVSYNCZ
ACTDATA
I336-A 74AC04
I336-F 74AC04
R339 0R
SCDT
SYNCVAL
W391-1 NDS128-002-BS
64A 63A 62A 61A 60A 59A 58A 57A 56A 55A 54A 53A 52A 51A 50A 49A 48A 47A 46A 45A 44A 43A 42A 41A 40A 39A 38A 37A 36A 35A 34A 33A 32A 31A 30A 29A 28A 27A 26A 25A 24A 23A 22A 21A 20A 19A 18A 17A 16A 15A 14A 13A 12A 11A 10A 9A 8A 7A 6A 5A 4A 3A 2A 1A
CW_INDEX
SDA4_5V
SCL4_5V
PWRGOOD
TCSG7
LAMPLITZ
LAMP_EN
PWM0
PWM1
SCALER_PWM
TEMP
U5 U15 U3V3 U12

Datum:	Name:	gepr.:	Index:	Bez.:
				RPTV Data Receiver
20.08.03	St. Suessmann	M. Zillich	"b"	
06.05.03	St. Suessmann	M. Zillich	"a"	Bl.1 von 1 Stand: 17.10.2003
				Zei.-Nr: 624/393-88682
				Variante:050 File: 88682b50

LOEWE. LOEWE AG Industriestr. 11 96305 Kronach
Alle Rechte, Änderungen vorbehalten!

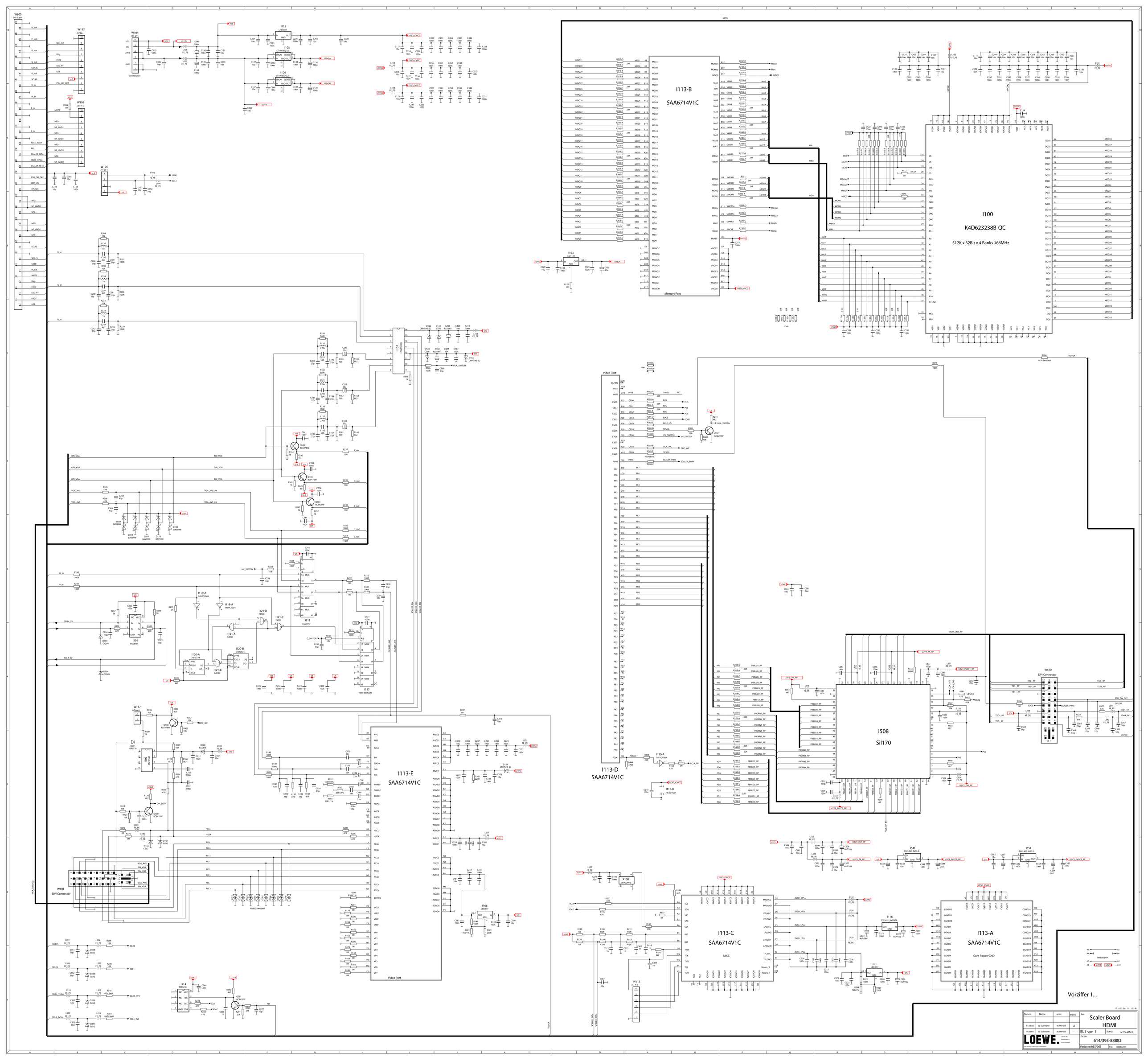

Datum:	Name:	gepr.:	Index:	Bez.: Scaler Board HDMI
11.08.03	St. Süßmann	M. Herold	A	
17.04.03	St. Süßmann	M. Herold	"-"	Bl. 1 von 1 Stand: 17.10.2003
LOEWE.				Zei./Nr.: 614/393-88882
				Variante: 055/065 File: 88882x50

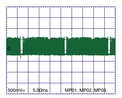

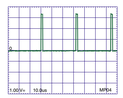

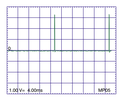

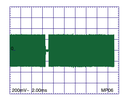

I2051
MSP3440G
MSP

I2421
SAA4998

I2311
SAA4979/108
BESIC

I2801
SDA6000
CCU

I2921
29LV320D
Flash 32MBit

I2916
K4S641632D
SDRAM-64MBit

I2151
VPC3230D-C5
PIP - VPC

I2271
VPC3230D
MAIN - VPC
C5

I2161
SAA4955HL

I2171
SAA4955HL

I2601
DDP3315C
DDP
G3

I2411
TDA84

I2318
WC502705ST ILP2

I2092
TDA4422D

I2531
4053D

I2453-2
74HCT4S32

I2453-1
74HCT4S32

I2842-D
74HCT04

I2842-C
74HCT04

I2842-B
74HCT04

I2842-A
74HCT04

I2841
74LS32D

I2193-A
74LVC86A

I2193-B
74LVC86A

I2193-C
74LVC86A

I2193-D
74LVC86A

I2193-E
74LVC86A

I2192-1
74LVC86A-V

I2192-2
74LVC86A-V

I2192-4
74LVC86A-V

I2192-5
74LVC86A-V

I2301-A
74LVC86A

I2301-B
74LVC86A

I2301-C
74LVC86A

I2301-D
74LVC86A

I2301-E
74LVC86A

I2150-3
74LVC86A-V

I2091-A
MC34074

I2091-B
MC34074

I2091-C
MC34074

I2091-D
MC34074

I2091-E
MC34074

I2056
MC78L05ACP

I2793-C
74LVC86A

I2793-D
74LVC86A

I2793-E
74LVC86A

I2793-F
74LVC86A

I2793-G
74LVC86A

I2793-H
74LVC86A

I2793-I
74LVC86A

I2793-J
74LVC86A

I2793-K
74LVC86A

I2793-L
74LVC86A

I2793-M
74LVC86A

I2793-N
74LVC86A

I2793-O
74LVC86A

I2793-P
74LVC86A

I2793-Q
74LVC86A

I2793-R
74LVC86A

I2793-S
74LVC86A

I2793-T
74LVC86A

I2793-U
74LVC86A

I2793-V
74LVC86A

I2793-W
74LVC86A

I2793-X
74LVC86A

I2793-Y
74LVC86A

I2793-Z
74LVC86A

I2793-AA
74LVC86A

I2793-AB
74LVC86A

I2793-AC
74LVC86A

I2793-AD
74LVC86A

I2793-AE
74LVC86A

I2793-AF
74LVC86A

I2793-AG
74LVC86A

I2793-AH
74LVC86A

I2793-AI
74LVC86A

I2793-AJ
74LVC86A

I2793-AK
74LVC86A

I2793-AL
74LVC86A

I2793-AM
74LVC86A

I2793-AN
74LVC86A

I2793-AO
74LVC86A

I2793-AP
74LVC86A

I2793-AQ
74LVC86A

I2793-AR
74LVC86A

I2793-AS
74LVC86A

I2793-AT
74LVC86A

I2793-AU
74LVC86A

I2793-AV
74LVC86A

I2793-AW
74LVC86A

I2793-AX
74LVC86A

I2793-AY
74LVC86A

I2793-AZ
74LVC86A

I2793-BA
74LVC86A

I2793-BB
74LVC86A

I2793-BC
74LVC86A

I2793-BD
74LVC86A

I2793-BE
74LVC86A

I2793-BF
74LVC86A

I2793-BG
74LVC86A

I2793-BH
74LVC86A

I2793-BI
74LVC86A

I2793-BJ
74LVC86A

I2793-BK
74LVC86A

I2793-BL
74LVC86A

I2793-BM
74LVC86A

I2793-BN
74LVC86A

I2793-BO
74LVC86A

I2793-BP
74LVC86A

I2793-BQ
74LVC86A

I2793-BR
74LVC86A

I2793-BS
74LVC86A

I2793-BT
74LVC86A

I2793-BU
74LVC86A

I2793-BV
74LVC86A

I2793-BW
74LVC86A

I2793-BX
74LVC86A

I2793-BY
74LVC86A

I2793-BZ
74LVC86A

I2793-CA
74LVC86A

I2793-CB
74LVC86A

I2793-CC
74LVC86A

I2793-CD
74LVC86A

I2793-CE
74LVC86A

I2793-CF
74LVC86A

I2793-CG
74LVC86A

I2793-CH
74LVC86A

I2793-CI
74LVC86A

I2793-CJ
74LVC86A

I2793-CK
74LVC86A

I2793-CL
74LVC86A

I2793-CM
74LVC86A

I2793-CN
74LVC86A

I2793-CO
74LVC86A

I2793-CP
74LVC86A

I2793-CQ
74LVC86A

I2793-CR
74LVC86A

I2793-CS
74LVC86A

I2793-CT
74LVC86A

I2793-CU
74LVC86A

I2793-CV
74LVC86A

I2793-CW
74LVC86A

I2793-CX
74LVC86A

I2793-CY
74LVC86A

I2793-CZ
74LVC86A

I2793-DA
74LVC86A

I2793-DB
74LVC86A

I2793-DC
74LVC86A

I2793-DD
74LVC86A

I2793-DE
74LVC86A

I2793-DF
74LVC86A

I2793-DG
74LVC86A

I2793-DH
74LVC86A

I2793-DI
74LVC86A

I2793-DJ
74LVC86A

I2793-DK
74LVC86A

I2793-DL
74LVC86A

I2793-DM
74LVC86A

I2793-DN
74LVC86A

I2793-DO
74LVC86A

I2793-DP
74LVC86A

I2793-DQ
74LVC86A

I2793-DR
74LVC86A

I2793-DS
74LVC86A

I2793-DT
74LVC86A

I2793-DU
74LVC86A

I2793-DV
74LVC86A

I2793-DW
74LVC86A

I2793-DX
74LVC86A

I2793-DY
74LVC86A

I2793-DZ
74LVC86A

I2793-EA
74LVC86A

I2793-EB
74LVC86A

I2793-EC
74LVC86A

I2793-ED
74LVC86A

I2793-EE
74LVC86A

I2793-EF
74LVC86A

I2793-EG
74LVC86A

I2793-EH
74LVC86A

I2793-EI
74LVC86A

I2793-EJ
74LVC86A

I2793-EK
74LVC86A

I2793-EL
74LVC86A

I2793-EM
74LVC86A

I2793-EN
74LVC86A

I2793-EO
74LVC86A

I2793-EP
74LVC86A

I2793-EQ
74LVC86A

I2793-ER
74LVC86A

I2793-ES
74LVC86A

I2793-ET
74LVC86A

I2793-EU
74LVC86A

I2793-EV
74LVC86A

I2793-EW
74LVC86A

I2793-EX
74LVC86A

I2793-EY
74LVC86A

I2793-EZ
74LVC86A

I2793-FA
74LVC86A

I2793-FB
74LVC86A

I2793-FC
74LVC86A

I2793-FD
74LVC86A

I2793-FE
74LVC86A

I2793-FF
74LVC86A

I2793-FG
74LVC86A

I2793-FH
74LVC86A

I2793-FI
74LVC86A

I2793-FJ
74LVC86A

I2793-FK
74LVC86A

I2793-FL
74LVC86A

I2793-FM
74LVC86A

I2793-FN
74LVC86A

I2793-FO
74LVC86A

I2793-FP
74LVC86A

I2793-FQ
74LVC86A

I2793-FR
74LVC86A

I2793-FS
74LVC86A

I2793-FT
74LVC86A

I2793-FU
74LVC86A

I2793-FV
74LVC86A

I2793-FW
74LVC86A

I2793-FX
74LVC86A

I2793-FY
74LVC86A

I2793-FZ
74LVC86A

I2793-GA
74LVC86A

I2793-GB
74LVC86A

I2793-GC
74LVC86A

I2793-GD
74LVC86A

I2793-GE
74LVC86A

I2793-GF
74LVC86A

I2793-GG
74LVC86A

I2793-GH
74LVC86A

I2793-GI
74LVC86A

I2793-GJ
74LVC86A

I2793-GK
74LVC86A

I2793-GL
74LVC86A

I2793-GM
74LVC86A

I2793-GN
74LVC86A

I2793-GO
74LVC86A

I2793-GP
74LVC86A

I2793-GQ
74LVC86A

I2793-GR
74LVC86A

I2793-GS
74LVC86A

I2793-GT
74LVC86A

I2793-GU
74LVC86A

I2793-GV
74LVC86A

I2793-GW
74LVC86A

I2793-GX
74LVC86A

I2793-GY
74LVC86A

I2793-GZ
74LVC86A

I2793-HA
74LVC86A

I2793-HB
74LVC86A

I2793-HC
74LVC86A

I2793-HD
74LVC86A

I2793-HE
74LVC86A

I2793-HF
74LVC86A

I2793-HG
74LVC86A

I2793-HH
74LVC86A

I2793-HI
74LVC86A

I2793-HJ
74LVC86A

I2793-HK
74LVC86A

I2793-HL
74LVC86A

I2793-HM
74LVC86A

I2793-HN
74LVC86A

I2793-HO
74LVC86A

I2793-HP
74LVC86A

I2793-HQ
74LVC86A

I2793-HR
74LVC86A

I2793-HS
74LVC86A

I2793-HT
74LVC86A

I2793-HU
74LVC86A

I2793-HV
74LVC86A

I2793-HW
74LVC86A

I2793-HX
74LVC86A

I2793-HY
74LVC86A

I2793-HZ
74LVC86A

I2793-IA
74LVC86A

I2793-IB
74LVC86A

I2793-IC
74LVC86A

I2793-ID
74LVC86A

I2793-IE
74LVC86A

I2793-IF
74LVC86A

I2793-IG
74LVC86A

I2793-IH
74LVC86A

I2793-II
74LVC86A

I2793-IJ
74LVC86A

I2793-IK
74LVC86A

I2793-IL
74LVC86A

I2793-IM
74LVC86A

I2793-IN
74LVC86A

I2793-IO
74LVC86A

I2793-IP
74LVC86A

I2793-IQ
74LVC86A

I2793-IR
74LVC86A

I2793-IS
74LVC86A

I2793-IT
74LVC86A

I2793-IU
74LVC86A

I2793-IV
74LVC86A

I2793-IW
74LVC86A

I2793-IX
74LVC86A

I2793-IY
74LVC86A

I2793-IZ
74LVC86A

I2793-JA
74LVC86A

I2793-JB
74LVC86A

I2793-JC
74LVC86A

I2793-JD
74LVC86A

I2793-JE
74LVC86A

I2793-JF
74LVC86A

I2793-JG
74LVC86A

I2793-JH
74LVC86A

I2793-JI
74LVC86A

I2793-JJ
74LVC86A

I2793-JK
74LVC86A

I2793-JL
74LVC86A

I2793-JM
74LVC86A

I2793-JN
74LVC86A

I2793-JO
74LVC86A

I2793-JP
74LVC86A

I2793-JQ
74LVC86A

I2793-JR
74LVC86A

I2793-JS
74LVC86A

I2793-JT
74LVC86A

I2793-JU
74LVC86A

I2793-JV
74LVC86A

I2793-JW
74LVC86A

I2793-JX
74LVC86A

I2793-JY
74LVC86A

I2793-JZ
74LVC86A

I2793-KA
74LVC86A

I2793-KB
74LVC86A

I2793-KC
74LVC86A

I2793-KD
74LVC86A

I2793-KE
74LVC86A

I2793-KF
74LVC86A

I2793-KG
74LVC86A

I2793-KH
74LVC86A

I2793-KI
74LVC86A

I2793-KJ
74LVC86A

I2793-KK
74LVC86A

I2793-KL
74LVC86A

I2793-KM
74LVC86A

I2793-KN
74LVC86A

I2793-KO
74LVC86A

I2793-KP
74LVC86A

I2793-KQ
74LVC86A

I2793-KR
74LVC86A

I2793-KS
74LVC86A

I2793-KT
74LVC86A

I2793-KU
74LVC86A

I2793-KV
74LVC86A

I2793-KW
74LVC86A

I2793-KX
74LVC86A

I2793-KY
74LVC86A

I2793-KZ
74LVC86A

I2793-LA
74LVC86A

I2793-LB
74LVC86A

I2793-LC
74LVC86A

I2793-LD
74LVC86A

I2793-LE
74LVC86A

I2793-LF
74LVC86A

I2793-LG
74LVC86A

I2793-LH
74LVC86A

I2793-LI
74LVC86A

I2793-LJ
74LVC86A

I2793-LK
74LVC86A

I2793-LL
74LVC86A

I2793-LM
74LVC86A

I2793-LN
74LVC86A

I2793-LO
74LVC86A

I2793-LP
74LVC86A

I2793-LQ
74LVC86A

I2793-LR
74LVC86A

I2793-LS
74LVC86A

I2793-LT
74LVC86A

I2793-LU
74LVC86A

I2793-LV
74LVC86A

I2793-LW
74LVC86A

I2793-LX
74LVC86A

I2793-LY
74LVC86A

I2793-LZ
74LVC86A

I2793-MA
74LVC86A

I2793-MB
74LVC86A

I2793-MC
74LVC86A

I2793-MD
74LVC86A

I2793-ME
74LVC86A

I2793-MF
74LVC86A

I2793-MG
74LVC86A

I2793-MH
74LVC86A

I2793-MI
74LVC86A

I2793-MJ
74LVC86A

I2793-MK
74LVC86A

I2793-ML
74LVC86A

I2793-MM
74LVC86A

I2793-MN
74LVC86A

I2793-MO
74LVC86A

I2793-MP
74LVC86A

I2793-MQ
74LVC86A

I2793-MR
74LVC86A

I2793-MS
74LVC86A

I2793-MT
74LVC86A

I2793-MU
74LVC86A

I2793-MV
74LVC86A

I2793-MW
74LVC86A

I2793-MX
74LVC86A

I2793-MY
74LVC86A

I2793-MZ
74LVC86A

I2793-NA
74LVC86A

I2793-NB
74LVC86A

I2793-NC
74LVC86A

I2793-ND
74LVC86A

I2793-NE
74LVC86A

I2793-NF
74LVC86A

I2793-NG
74LVC86A

I2793-NH
74LVC86A

I2793-NI
74LVC86A

I2793-NJ
74LVC86A

I2793-NK
74LVC86A

I2793-NL
74LVC86A

I2793-NM
74LVC86A

I2793-NN
74LVC86A

I2793-NO
74LVC86A

I2793-NP
74LVC86A

I2793-NQ
74LVC86A

I2793-NR
74LVC86A

I2793-NS
74LVC86A

I2793-NT
74LVC86A

I2793-NU
74LVC86A

I2793-NV
74LVC86A

I2793-NW
74LVC86A

I2793-NX
74LVC86A

I2793-NY
74LVC86A

I2793-NZ
74LVC86A

I2793-OA
74LVC86A

I2793-OB
74LVC86A

I2793-OC
74LVC86A

I2793-OD
74LVC86A

I2793-OE
74LVC86A

I2793-OF
74LVC86A

I2793-OG
74LVC86A

I2793-OH
74LVC86A

I2793-OI
74LVC86A

I2793-OJ
74LVC86A

I2793-OK
74LVC86A

I2793-OL
74LVC86A

I2793-OM
74LVC86A

I2793-ON
74LVC86A

I2793-OO
74LVC86A

I2793-OP
74LVC86A

I2793-OQ
74LVC86A

I2793-OR
74LVC86A

I2793-OS
74LVC86A

I2793-OT
74LVC86A

I2793-OU
74LVC86A

I2793-OV
74LVC86A

I2793-OW
74LVC86A

I2793-OX
74LVC86A

I2793-OY
74LVC86A

I2793-OZ
74LVC86A

I2793-PA
74LVC86A

I2793-PB
74LVC86A

I2793-PC
74LVC86A

I2793-PD
74LVC86A

I2793-PE
74LVC86A

I2793-PF
74LVC86A

I2793-PG
74LVC86A

I2793-PH
74LVC86A

I2793-PI
74LVC86A

I2793-PJ
74LVC86A

I2793-PK
74LVC86A

I2793-PL
74LVC86A

I2793-PM
74LVC86A

I2793-PN
74LVC86A

I2793-PO
74LVC86A

I2793-PP
74LVC86A

I2793-PQ
74LVC86A

I2793-PR
74LVC86A

I2793-PS
74LVC86A

I2793-PT
74LVC86A

I2793-PU
74LVC86A

I2793-PV
74LVC86A

I2793-PW
74LVC86A

I2793-PX
74LVC86A

I2793-PY
74LVC86A

I2793-PZ
74LVC86A

I2793-QA
74LVC86A

I2793-QB
74LVC86A

I2793-QC
74LVC86A

I2793-QD
74LVC86A

I2793-QE
74LVC86A

I2793-QF
74LVC86A

I2793-QG
74LVC86A

I2793-QH
74LVC86A

I2793-QI
74LVC86A

I2793-QJ
74LVC86A

I2793-QK
74LVC86A

I2793-QL
74LVC86A

I2793-QM
74LVC86A

I2793-QN
74LVC86A

I2793-QO
74LVC86A

I2793-QP
74LVC86A

I2793-QQ
74LVC86A

I2793-QR
74LVC86A

I2793-QS
74LVC86A

I2793-QT
74LVC86A

I2793-QU
74LVC86A

I2793-QV
74LVC86A

I2793-QW
74LVC86A

I2793-QX
74LVC86A

I2793-QY
74LVC86A

I2793-QZ
74LVC86A

I2793-RA
74LVC86A

I2793-RB
74LVC86A

I2793-RC
74LVC86A

I2793-RD
74LVC86A

I2793-RE
74LVC86A

I2793-RF
74LVC86A

I2793-RG
74LVC86A

I2793-RH
74LVC86A

I2793-RI
74LVC86A

I2793-RJ
74LVC86A

I2793-RK
74LVC86A

I2793-RL
74LVC86A

I2793-RM
74LVC86A

I2793-RN
74LVC86A

I2793-RO
74LVC86A

I2793-RP
74LVC86A

I2793-RQ
74LVC86A

I2793-RR
74LVC86A

I2793-RS
74LVC86A

I2793-RT
74LVC86A

I2793-RU
74LVC86A

I2793-RV
74LVC86A

I2793-RW
74LVC86A

I2793-RX
74LVC86A

I2793-RY
74LVC86A

I2793-RZ
74LVC86A

I2793-SA
74LVC86A

I2793-SB
74LVC86A

I2793-SC
74LVC86A

I2793-SD
74LVC86A

I2793-SE
74LVC86A

I2793-SF
74LVC86A

I2793-SG
74LVC86A

I2793-SH
74LVC86A

I2793-SI
74LVC86A

I2793-SJ
74LVC86A

I2793-SK
74LVC86A

I2793-SL
74LVC86A

I2793-SM
74LVC86A

I2793-SN
74LVC86A

I2793-SO
74LVC86A

I2793-SP
74LVC86A

I2793-SQ
74LVC86A

I2793-SR
74LVC86A

I2793-SS
74LVC86A

I2793-ST
74LVC86A

I2793-SU
74LVC86A

I2793-SV
74LVC86A

I2793-SW
74LVC86A

I2793-SX
74LVC86A

I2793-SY
74LVC86A

I2793-SZ
74LVC86A

I2793-TA
74LVC86A

I2793-TB
74LVC86A

I2793-TC
74LVC86A

I2793-TD
74LVC86A

I2793-TE
74LVC86A

I2793-TF
74LVC86A

I2793-TG
74LVC86A

I2793-TH
74LVC86A

I2793-TI
74LVC86A

I2793-TJ
74LVC86A

I2793-TK
74LVC86A

I2793-TL
74LVC86A

I2793-TM
74LVC86A

I2793-TN
74LVC86A

I2793-TO
74LVC86A

I2793-TP
74LVC86A

I2793-TQ
74LVC86A

I2793-TR
74LVC86A

I2793-TS
74LVC86A

I2793-TT
74LVC86A

I2793-TU
74LVC86A

I2793-TV
74LVC86A

I2793-TW
74LVC86A

I2793-TX
74LVC86A

I2793-TY
74LVC86A

I2793-TZ
74LVC86A

I2793-UA
74LVC86A

I2793-UB
74LVC86A

I2793-UC
74LVC86A

I2793-UD
74LVC86A

I2793-UE
74LVC86A

I2793-UF
74LVC86A

I2793-UG
74LVC86A

I2793-UH
74LVC86A

I2793-UI
74LVC86A

I2793-UJ
74LVC86A

I2793-UK
74LVC86A

I2793-UL
74LVC86A

I2793-UM
74LVC86A

I2793-UN
74LVC86A

I2793-UO
74LVC86A

I2793-UP
74LVC86A

I2793-UQ
74LVC86A

I2793-UR
74LVC86A

I2793-US
74LVC86A

I2793-UT
74LVC86A

I2793-UU
74LVC86A

I2793-UV
74LVC86A

I2793-UW
74LVC86A

I2793-UX
74LVC86A

I2793-UY
74LVC86A

I2793-UZ
74LVC86A

I2793-VA
74LVC86A

I2793-VB
74LVC86A

I2793-VC
74LVC86A

I2793-VD
74LVC86A

I2793-VE
74LVC86A

I2793-VF
74LVC86A

I2793-VG
74LVC86A

I2793-VH
74LVC86A

I2793-VI
74LVC86A

I2793-VJ
74LVC86A

I2793-VK
74LVC86A

I2793-VL
74LVC86A

I2793-VM
74LVC86A

I2793-VN
74LVC86A

I2793-VO
74LVC86A

I2793-VP
74LVC86A

I2793-VQ
74LVC86A

I2793-VR
74LVC86A

I2793-VS
74LVC86A

I2793-VT
74LVC86A

I2793-VU
74LVC86A

I2793-VV
74LVC86A

I2793-VW
74LVC86A

I2793-VX
74LVC86A

I2793-VY
74LVC86A

I2793-VZ
74LVC86A

I2793-WA
74LVC86A

I2793-WB
74LVC86A

I2793-WC
74LVC86A

I2793-WD
74LVC86A

I2793-WE
74LVC86A

I2793-WF
74LVC86A

I2793-WG
74LVC86A

I2793-WH
74LVC86A

I2793-WI
74LVC86A

I2793-WJ
74LVC86A

I2793-WK
74LVC86A

I2793-WL
74LVC86A

I2793-WM
74LVC86A

I2793-WN
74LVC86A

I2793-WO
74LVC86A

I2793-WP
74LVC86A

I2793-WQ
74LVC86A

I2793-WR
74LVC86A

I2793-WS
74LVC86A

I2793-WT
74LVC86A

I2793-WU
74LVC86A

I2793-WV
74LVC86A

I2793-WW
74LVC86A

I2793-WX
74LVC86A

I2793-WY
74LVC86A

I2793-WZ
74LVC86A

I2793-XA
74LVC86A

I2793-XB
74LVC86A

I2793-XC
74LVC86A

I2793-XD
74LVC86A

I2793-XE
74LVC86A

I2793-XF
74LVC86A

I2793-XG
74LVC86A

I2793-XH
74LVC86A

I2793-XI
74LVC86A

I2793-XJ
74LVC86A

I2793-XK
74LVC86A

I2793-XL
74LVC86A

I2793-XM
74LVC86A

I2793-XN
74LVC86A

I2793-XO
74LVC86A

I2793-XP
74LVC86A

I2793-XQ
74LVC86A

I2793-XR
74LVC86A

I2793-XS
74LVC86A

I2793-XT
74LVC86A

I2793-XU
74LVC86A

I2793-XV
74LVC86A

I2793-XW
74LVC86A

I2793-XX
74LVC86A

I2793-XY
74LVC86A

I2793-XZ
74LVC86A

I2793-YA
74LVC86A

I2793-YB
74LVC86A

I2793-YC
74LVC86A

I2793-YD
74LVC86A

I2793-YE
74LVC86A

I2793-YF
74LVC86A

I2793-YG
74LVC86A

I2793-YH
74LVC86A

I2793-YI
74LVC86A

I2793-YJ
74LVC86A

I2793-YK
74LVC86A

I2793-YL
74LVC86A

I2793-YM
74LVC86A

I2793-YN
74LVC86A

I2793-YO
74LVC86A

I2793-YP
74LVC86A

I2793-YQ
74LVC86A

I2793-YR
74LVC86A

I2793-YS
74LVC86A

I2793-YT
74LVC86A

I2793-YU
74LVC86A

I2793-YV
74LVC86A

I2793-YW
74LVC86A

I2793-YX
74LVC86A

I2793-YY
74LVC86A

I2793-YZ
74LVC86A

I2793-ZA
74LVC86A

I2793-ZB
74LVC86A

I2793-ZC
74LVC86A

I2793-ZD
74LVC86A

I2793-ZE
74LVC86A

I2793-ZF
74LVC86A

I2793-ZG
74LVC86A

I2793-ZH
74LVC86A

I2793-ZI
74LVC86A

I2793-ZJ
74LVC86A

I2793-ZK
74LVC86A

I2793-ZL
74LVC86A

I2793-ZM
74LVC86A

I2793-ZN
74LVC86A

I2793-ZO
74LVC86A

I2793-ZP
74LVC86A

I2793-ZQ
74LVC86A

I2793-ZR
74LVC86A

I2793-ZS
74LVC86A

I2793-ZT
74LVC86A

I2793-ZU
74LVC86A

I2793-ZV
74LVC86A

I2793-ZW
74LVC86A

I2793-ZX
74LVC86A

I2793-ZY
74LVC86A

I2793-ZZ
74LVC86A

I2793-AAA
74LVC86A

I2793-AAB
74LVC86A

I2793-AAC
74LVC86A

I2793-AAD
74LVC86A

I2793-AAE
74LVC86A

I2793-AAF
74LVC86A

I2793-AAG
74LVC86A

I2793-AAH
74LVC86A

I2793-AAI
74LVC86A

I2793-AAJ
74LVC86A

I2793-AAK
74LVC86A

I2793-AAL
74LVC86A

I2793-AAM
74LVC86A

I2793-AAN
74LVC86A

I2793-AAO
74LVC86A

I2793-AAP
74LVC86A

I2793-AAQ
74LVC86A

I2793-AAR
74LVC86A

I2793-AAS
74LVC86A

I2793-AAT
74LVC86A

I2793-AAU
74LVC86A

I2793-AAV
74LVC86A

I2793-AAW
74LVC86A

I2793-AAX
74LVC86A

I2793-AAY
74LVC86A

I2793-AAZ
74LVC86A

I2793-ABA
74LVC86A

I2793-ABB
74LVC86A

I2793-ABC
74LVC86A

I2793-ABD
74LVC86A

I2793-ABE
74LVC86A

I2793-ABF
74LVC86A

I2793-ABG
74LVC86A

I2793-ABH
74LVC86A

I2793-ABI
74LVC86A

I2793-ABJ
74LVC86A

I2793-ABK
74LVC86A

I2793-ABL
74LVC86A

I2793-ABM
74LVC86A

I2793-ABN
74LVC86A

I2793-ABO
74LVC86A

I2793-ABP
74LVC86A

I2793-ABQ
74LVC86A

I2793-ABR
74LVC86A

I2793-ABS
74LVC86A

I2793-ABT
74LVC86A

I2793-ABU
74LVC86A

I2793-ABV
74LVC86A

I2793-ABW
74LVC86A

I2793-ABX
74LVC86A

I2793-ABY
74LVC86A

I2793-ABZ
74LVC86A

I2793-ACA
74LVC86A

I2793-ACB
74LVC86A

I2793-ACC
74LVC86A

I2793-ACD
74LVC86A

I2793-ACE
74LVC86A

I2793-ACF
74LVC86A

I2793-ACG
74LVC86A

I2793-ACH
74LVC86A

I2793-ACI
74LVC86A

I2793-ACJ
74LVC86A

I2793-ACK
74LVC86A

I2793-ACL
74LVC86A

I2793-ACM
74LVC86A

I2793-ACN
74LVC86A

I2793-ACO
74LVC86A

I2793-ACP
74LVC86A

I2793-ACQ
74LVC86A

I2793-ACR
74LVC86A

I2793-ACS
74LVC86A

I2793-ACT
74LVC86A

I2793-ACU
74LVC86A

I2793-ACV
74LVC86A

I2793-ACW
74LVC86A

I2793-ACX
74LVC86A

I2793-ACY
74LVC86A

I2793-ACZ
74LVC86A

I2793-ADA
74LVC86A

I2793-ADB
74LVC86A

I2793-ADC
74LVC86A

I2793-ADD
74LVC86A

I2793-ADE
74LVC86A

I2793-ADF
74LVC86A

I2793-ADG
74LVC86A

I2793-ADH
74LVC86A

I2793-ADI
74LVC86A

I2793-ADJ
74LVC86A

I2793-ADK
74LVC86A

I2793-ADL
74LVC86A

I2793-ADM
74LVC86A

I2793-ADN
74LVC86A

I2793-ADO
74LVC86A

I2793-ADP
74LVC86A

I2793-ADQ
74LVC86A

I2793-ADR
74LVC86A

I2793-ADS
74LVC86A

I2793-ADT
74LVC86A

I2793-ADU
74LVC86A

I2793-ADV
74LVC86A

I2793-ADW
74LVC86A

I2793-ADX
74LVC86A

I2793-ADY
74LVC86A

I2793-ADZ
74LVC86A

I2793-AEA
74LVC86A

I2793-AEB
74LVC86A

I2793-AEC
74LVC86A

I2793-AED
74LVC86A

I2793-AEE
74LVC86A

I2793-AEF
74LVC86A

I2793-AEG
74LVC86A

I2793-AEH
74LVC86A

I2793-AEI
74LVC86A

I2793-AEJ
74LVC86A

I2793-AEK
74LVC86A

I2793-AEL
74LVC86A

I2793-AEM
74LVC86A

I2793-AEN
74LVC86A

I2793-AEO
74LVC86A

I2793-AEP
74LVC86A

I2793-AEQ
74LVC86A

I2793-AER
74LVC86A

I2793-AES
74LVC86A

I2793-AET
74LVC86A

I2793-AEU
74LVC86A

I2793-AEV
74LVC86A

I2793-AEW
74LVC86A

I2793-AEX
74LVC86A

I2793-AEY
74LVC86A

I2793-AEZ
74LVC86A

I2793-AFA
74LVC86A

I2793-AFB
74LVC86A

I2793-AFC
74LVC86A

I2793-AFD
74LVC86A

I2793-AFE
74LVC86A

I2793-AFF
74LVC86A

I2793-AFG
74LVC86A

I2793-AFH
74LVC86A

I2793-AFI
74LVC86A

I2793-AFJ
74LVC86A

I2793-AFK
74LVC86A

I2793-AFL
74LVC86A

I2793-AFM
74LVC86A

I2793-AFN
74LVC86A

I2793-AFO
74LVC86A

I2793-AFP
74LVC86A

I2793-AFQ
74LVC86A

I2793-AFR
74LVC86A

I2793-AFS
74LVC86A

I2793-AFT
74LVC86A

I2793-AFU
74LVC86A

I2793-AFV
74LVC86A

I2793-AFW
74LVC86A

I2793-AFX
74LVC86A

I2793-AFY
74LVC86A

I2793-AFZ
74LVC86A

I2793-AGA
74LVC86A

I2793-AGB
74LVC86A

I2793-AGC
74LVC86A

I2793-AGD
74LVC86A

I2793-AGE
74LVC86A

I2793-AGF
74LVC86A

I2793-AGG
74LVC86A

I2793-AGH
74LVC86A

I2793-AGI
74LVC86A

I2793-AGJ
74LVC86A

I2793-AGK
74LVC86A

I2793-AGL
74LVC86A

I2793-AGM
74LVC86A

I2793-AGN
74LVC86A

I2793-AGO
74LVC86A

I2793-AGP
74LVC86A

I2793-AGQ
74LVC86A

I2793-AGR
74LVC86A

I2793-AGS
74LVC86A

I2793-AGT
74LVC86A

I2793-AGU
74LVC86A

I2793-AGV
74LVC86A

I2793-AGW
74LVC86A

I2793-AGX
74LVC86A

I2793-AGY
74LVC86A

I2793-AGZ
74LVC86A

I2793-AHA
74LVC86A

I2793-AHB
74LVC86A

I2793-AHC
74LVC86A

I2793-AHD
74LVC86A

I2793-AHE
74LVC86A

I2793-AHF
74LVC86A

I2793-AHG
74LVC86A

I2793-AHH
74LVC86A

I2793-AHI
74LVC86A

I2793-AHJ
74LVC86A

I2793-AHK
74LVC86A

I2793-AHL
74LVC86A

I2793-AHM
74LVC86A

I2793-AHN
74LVC86A

I2793-AHO
74LVC86A

I2793-AHP
74LVC86A

I2793-AHQ
74LVC86A

I2793-AHR
74LVC86A

I2793-AHS
74LVC86A

I2793-AHT
74LVC86A

I2793-AHU
74LVC86A

I2793-AHV
74LVC86A

I2793-AHW
74LVC86A

I2793-AHX
74LVC86A

I2793-AHY
74LVC86A

I2793-AHZ
74LVC86A

I2793-AIA
74LVC86A

I2793-AIB
74LVC86A

I2793-AIC
74LVC86A

I2793-AID
74LVC86A

I2793-AIE
74LVC86A

I2793-AIF
74LVC86A

I2793-AIG
74LVC86A

I2793-AIH
74LVC86A

I2793-AII
74LVC86A

I2793-AIJ
74LVC86A

I2793-AIK
74LVC86A

I2793-AIL
74LVC86A

I2793-AIM
74LVC86A

I2793-AIN
74LVC86A

I2793-AIO
74LVC86A

I2793-AIP
74LVC86A

I2793-AIQ
74LVC86A

I2793-AIR
74LVC86A

I2793-AIS
74LVC86A

I2793-AIT
74LVC86A

I2793-AIU
74LVC86A

I2793-AIV
74LVC86A

I2793-AIW
74LVC86A

I2793-AIX
74LVC86A

I2793-AIY
74LVC86A

I2793-AIZ
74LVC86A

I2793-AJA
74LVC86A

I2793-AJB
74LVC86A

I2793-AJC
74LVC86A

I2793-AJD
74LVC86A

I2793-AJE
74LVC86A

I2793-AJF
74LVC86A

I2793-AJG
74LVC86A

I2793-AJH
74LVC86A

I2793-AJI
74LVC86A

I2793-AJJ
74LVC86A

I2793-AJK
74LVC86A

I2793-AJL
74LVC86A

I2793-AJM
74LVC86A

I2793-AJN
74LVC86A

I2793-AJO
74LVC86A

I2793-AJP
74LVC86A

I2793-AJQ
74LVC86A

I2793-AJR
74LVC86A

I2793-AJS
74LVC86A

I2793-AJT
74LVC86A

I2793-AJU
74LVC86A

I2793-AJV
74LVC86A

I2793-AJW
74LVC86A

I2793-AJX
74LVC86A

I2793-AJY
74LVC86A

I2793-AJZ
74LVC86A

I2793-AKA
74LVC86A

I2793-AKB
74LVC86A

I2793-AKC
74LVC86A

I2793-AKD
74LVC86A

I2793-AKE
74LVC86A

I2793-AKF
74LVC86A

I2793-AKG
74LVC86A

I2793-AKH
74LVC86A

I2793-AKI
74LVC86A

I2793-AKJ
74LVC86A

I2793-AKK
74LVC86A

I2793-AKL
74LVC86A

I2793-AKM
74LVC86A

I2793-AKN
74LVC86A

I2793-AKO
74LVC86A

I2793-AKP
74LVC86A

I2793-AKQ
74LVC86A

I2793-AKR
74LVC86A

I2793-AKS
74LVC86A

I2793-AKT
74LVC86A

I2793-AKU
74LVC86A

I2793-AKV
74LVC86A

I2793-AKW
74LVC86A

I2793-AKX
74LVC86A

I2793-AKY
74LVC86A

I2793-AKZ
74LVC86A

I2793-ALA
74LVC86A

I2793-ALB
74LVC86A

I2793-ALC
74LVC86A

I2793-ALD
74LVC86A

I2793-ALE
74LVC86A

I2793-ALF
74LVC86A

I2793-ALG
74LVC86A

I2793-ALH
74LVC86A

I2793-ALI
74LVC86A

I2793-ALJ
74LVC86A

I2793-ALK
74LVC86A

I2793-ALL
74LVC86A

I2793-ALM
74LVC86A

I2793-ALN
74LVC86A

I2793-ALO
74LVC86A

I2793-ALP
74LVC86A

I2793-ALQ
74LVC86A

I2793-ALR
74LVC86A

I2793-ALS
74LVC86A

I2793-ALT
74LVC86A

I2793-ALU
74LVC86A

I2793-ALV
74LVC86A

I2793-ALW
74LVC86A

I2793-ALX
74LVC86A

I2793-ALY
74LVC86A

I2793-ALZ
74LVC86A

I2793-AMA
74LVC86A

I2793-AMB
74LVC86A

I2793-AMC
74LVC86A

I2793-AMD
74LVC86A

I2793-AME
74LVC86A

I2793-AMF
74LVC86A

I2793-AMG
74LVC86A

I2793-AMH
74LVC86A

I2793-AMI
74LVC86A

I2793-AMJ
74LVC86A

I2793-AMK
74LVC86A

I2793-AML
74LVC86A

I2793-AMM
74LVC86A

I2793-AMN
74LVC86A

I2793-AMO
74LVC86A

I2793-AMP
74LVC86A

I2793-AMQ
74LVC86A

I2793-AMR
74LVC86A

I2793-AMS
74LVC86A

I2793-AMT
74LVC86A

I2793-AMU
74LVC86A

I2793-AMV
74LVC86A

I2793-AMW
74LVC86A

I2793-AMX
74LVC86A

I2793-AMY
74LVC86A

I2793-AMZ
74LVC86A

I2793-ANA
74LVC86A

I2793-ANB
74LVC86A

I2793-ANC
74LVC86A

I2793-AND
74LVC86A

I2793-ANE
74LVC86A

I2793-ANF
74LVC86A

I2793-ANG
74LVC86A

I2793-ANH
74LVC86A

I2793-ANI
74LVC86A

I2793-ANJ
74LVC